ANI4OUT

Audio Network Interface

User guide for Shure ANI4OUT. Includes system diagrams, specifications, installation/hardware instructions, and command strings

Version: 3.3 (2024-C)

Table of Contents

ANI4OUT Audio Network Interface **3**

Overview **3**

General Description 3

Model Variations 3

Hardware and Installation **3**

Hardware 3

Power Over Ethernet (PoE) **5**

Installation and Rack Mounting 5

Reset 8

Signal Flow and Connections **8**

Connections and Signal Flow 8

Setting up the Audio Network 9

Summing 11

Encryption 11

Software Installation, Management, and Security **11**

Software Installation and Device Discovery 11

Accessing the Web Application 12

Accessing the Web Application without the Discovery App 12

Firmware Updates 12

Parametric Equalizer 13

Custom Presets 15

Event Log 15

Levels and Metering **16**

Adjusting Input levels 16

Adjusting Output Levels 16

Pre- and Post-Fader Metering 16

Using a Third-Party Control System **16**

Networking and Dante **17**

Digital Audio Networking 17

Switch and Cable Recommendations for Dante Networking 17

Compatibility with Dante Domain Manager 17

QoS (Quality of Service) Settings 18

Dante Transmit Flows 18

Packet Bridge 19

Important Product Information **19**

Information to the user 19

Specifications **20**

IP Ports and Protocols 22

Accessories **23**

Furnished Accessories 23

Optional Accessories and Replacement Parts 23

ANI4OUT
Audio Network Interface

Overview

General Description

The Shure Audio Network Interface converts 4 channels of Dante™ digital audio into discrete analog signals. Connect to a processing device with analog connections (audio processors, video codecs, and loudspeaker systems, for example) to fully integrate networked audio and analog equipment in a single system. Available in XLR and block connector versions, each box uses a single network cable to receive audio and power through Power over Ethernet (PoE).

Model Variations

ANI4OUT-XLR: Four XLR outputs (balanced audio)
ANI4OUT-BLOCK: Four 3-pin block connector outputs (balanced audio)

Hardware and Installation

Hardware

Block Connector Model

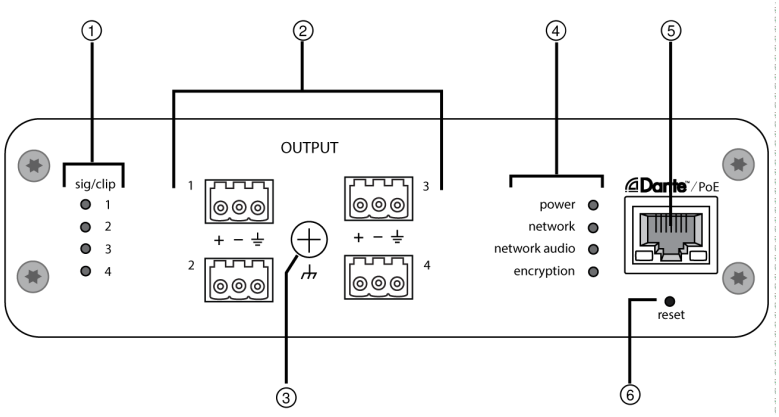



Front Panel

XLR Model

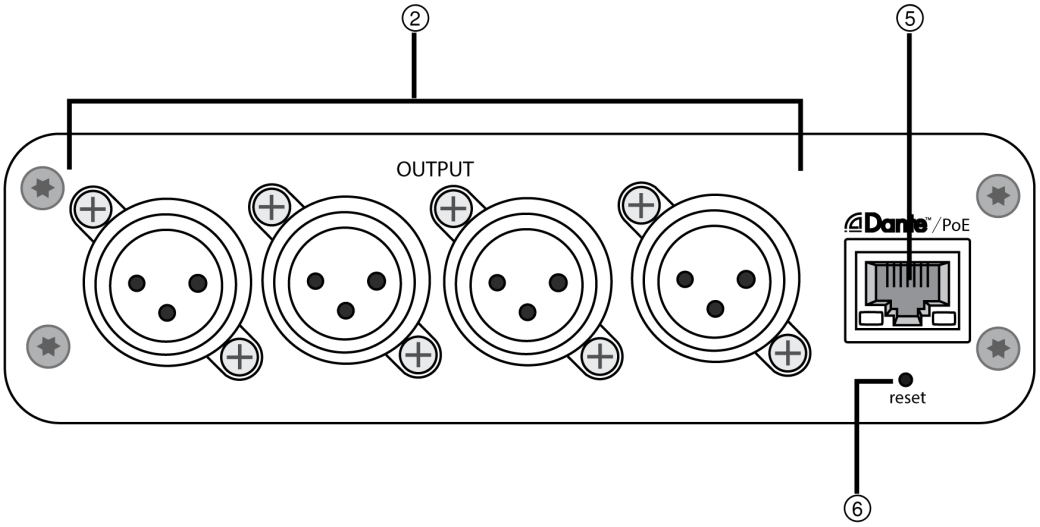

Rear Panel

① Output Level Indicators (Signal/Clip)

Tri-color LEDs indicate the audio signal level for each channel. Adjust levels in the web application to avoid clipping.

LED State	Audio Signal Level
Off	less than -60 dBFS
Green	-59 dBFS to -24 dBFS
Yellow	-23 dBFS to -1 dBFS
Red	0 dBFS or more

② Audio Outputs

Analog balanced audio outputs connect to an analog device. Set the output level in the web application to match the input sensitivity of the analog device.

XLR pin assignments:

1	Shield
2	+
3	-

Block connector pin assignments: See front panel labels

③ Chassis Ground Screw

Provides an optional connection for microphone shield wire to chassis ground

Note: *only applies to block connector version*

④ LED Indicators

Power: Power over Ethernet (PoE) present

Note: Note: Use a PoE injector if your network switch does not supply PoE.

Network: Network connection active

Network Audio: Dante audio present on the network

Note: *Error details are available in the event log in the web application.*

Encryption: Not currently supported

LED Status	Activity
Off	No active signal
Green	Device is operating successfully
Red	Error has occurred. See event log for details.

⑤ Dante Network Port

Connects to a network switch to receive Dante audio, Power over Ethernet (PoE), and data from the control software.

⑥ Reset Button

Resets the device settings back to the factory default

Power Over Ethernet (PoE)

This device requires PoE to operate. It is compatible with both **Class 0** and **Class 3** PoE sources.

Power over Ethernet is delivered in one of the following ways:

- A network switch that provides PoE
- A PoE injector device

Installation and Rack Mounting

Two mounting solutions are available for installing the Audio Network Interface:

CRT1 19" Rack Tray (optional accessory): Supports up to 3 devices; mountable in a rack or under a table

Single-unit Mounting Tray (included accessory): Supports a single device for mounting under a table

Securing the Devices

Use the included screws from the mounting hardware kit to secure the Audio Network Interfaces. Audio Network Interfaces can be mounted to face either direction. Insert the screws from the bottom in the appropriate holes, according to the following diagrams:



Align the holes as shown for securing a single device in the single-unit mounting tray

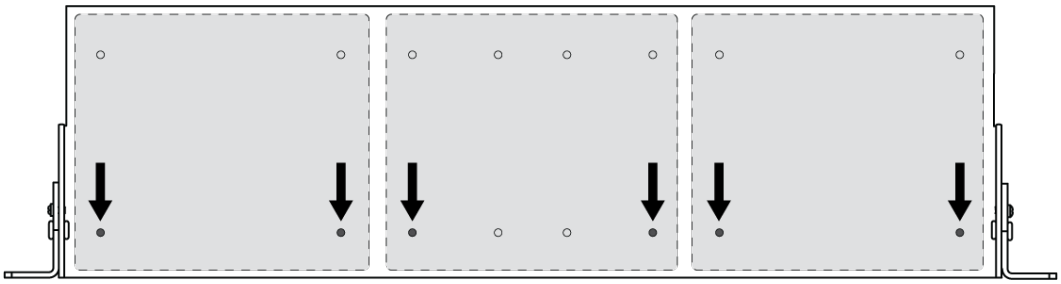

Align the holes as shown for securing up to 3 devices in the 19" rack tray.

Rack Ear Configuration

A combination of up to 3 Audio Network Interfaces can be mounted in a single 19-inch rack space. The adjustable rack ears support mounting in a standard equipment rack or underneath a table.

Standard 19" Rack Mount

1. Align the ears with the mounting holes pointed forward.
2. Install the 3 screws that hold the ear to the tray as shown.

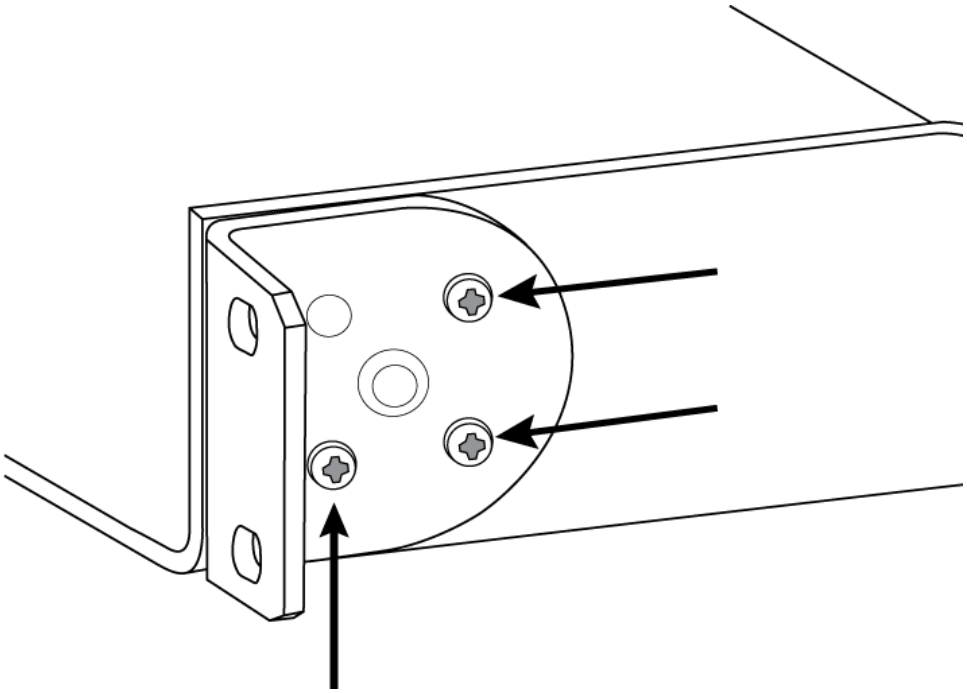

Under-Table Mounting

1. Align the ears with the mounting holes pointed upward.
2. Install the 3 screws that hold the ear to the tray as shown.

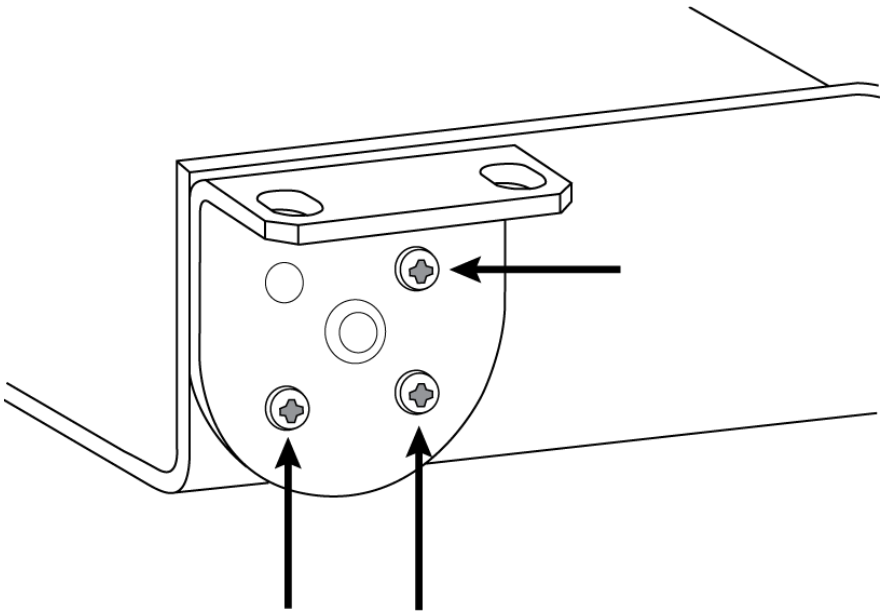

Installing Underneath a Table

1. Hold the tray in the desired location under a table.
2. Use a pencil to mark the location of the mounting holes on the table.
3. Drill 4 holes for the screws. The diameter of the holes in the tray are 7.1 mm.

4. Install the components into the tray.
5. Install with 4 screws to secure the tray underneath the table.

Reset

The reset button is located inside a small hole in the rear panel. Use a paperclip or other small tool to press the button.

There are 2 hardware reset functions:

Network reset (press button for 4-8 seconds)

Resets all Shure control and audio network IP settings to factory defaults

Full factory reset (press button for longer than 8 seconds)

Restores all network and configuration settings to the factory defaults.

Software Reset Options

To simply revert settings without a complete hardware reset, use one of the following options:

Reboot Device: Power-cycles the device as if it were unplugged from the network. All settings are retained when the device is rebooted.

Default Settings: To revert audio settings back to the factory configuration (excluding Device Name, IP Settings, and Passwords), select Load Preset and choose the default settings preset.

Signal Flow and Connections

Connections and Signal Flow

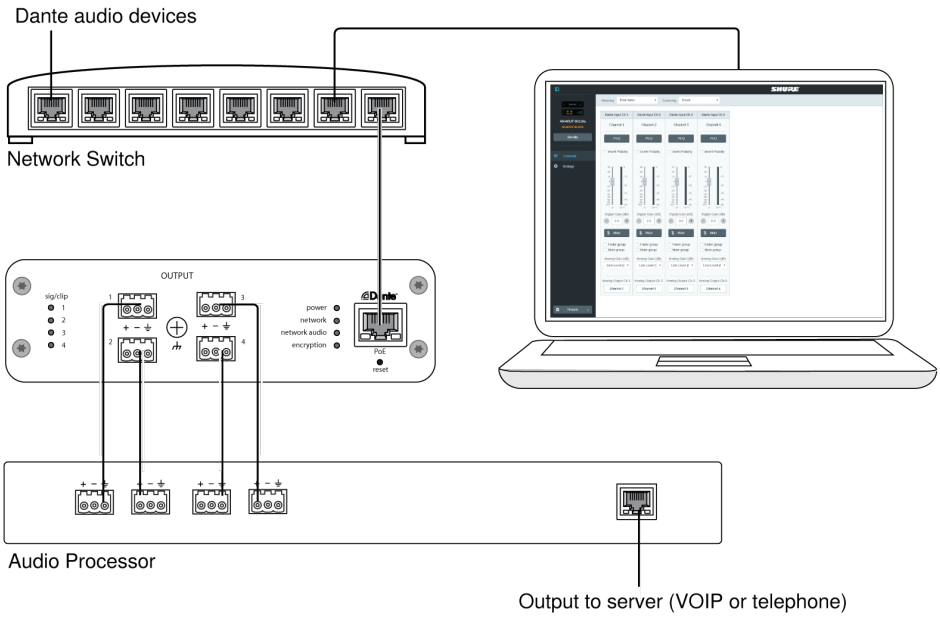

Input: Dante Digital Audio

A single network cable delivers 4 channels of audio and Power over Ethernet (PoE). Use Dante Controller to route audio channels from the network to the network interface.

Output: Analog (4 XLR or Block Connectors)

Each output sends a discrete audio channel to connect to an analog device.

Setting up the Audio Network

Shure networked conferencing systems are comprised of Microflex Advance microphones and network interfaces, which operate entirely on a Dante network. Additional hardware, including network switches, computers, loudspeakers, and audio processors are described in the hardware component index.

Shure components shown in this diagram:

Microflex Advance Microphones

The MXA910 and MXA310 are equipped with Dante outputs, and connect directly to a network switch.

Audio Network Interfaces

The interfaces are used to connect analog devices such as loudspeakers and analog microphones to the network.

ANI4IN: Converts 4 analog signals (separate XLR and block connector models available) into Dante digital audio signals.

ANI4OUT: Converts 4 channels of Dante audio from the network into analog signals.

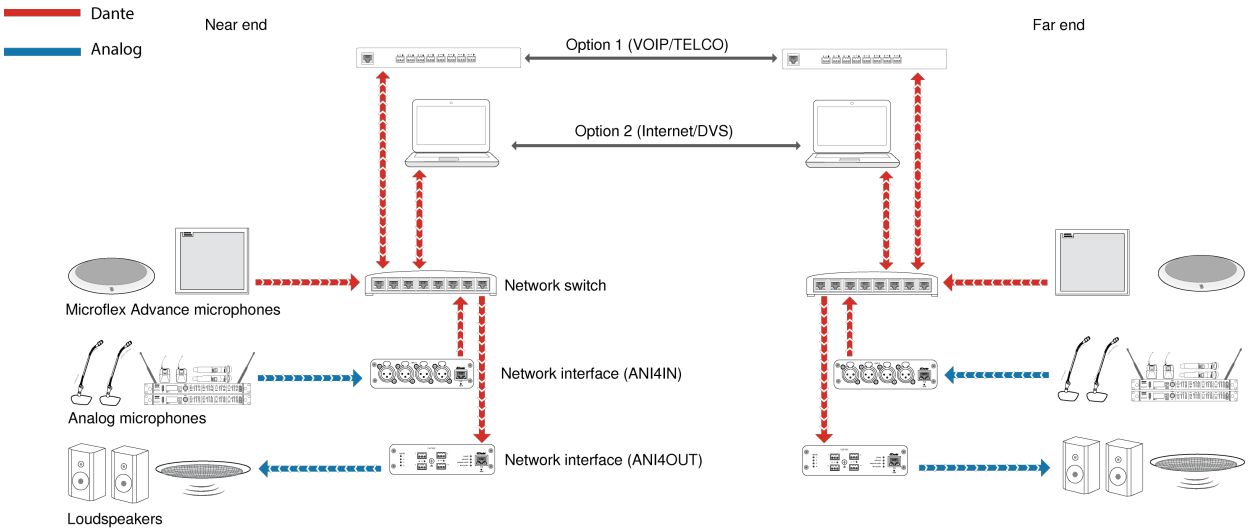

This diagram shows the entire signal path through a networked conference system. Signals from the near end and far end are exchanged through an audio processor connected to a phone system, or through a computer connected to the internet. Analog microphones connect to the network through the Shure ANI4IN, while loudspeakers connect through the Shure ANI4OUT.

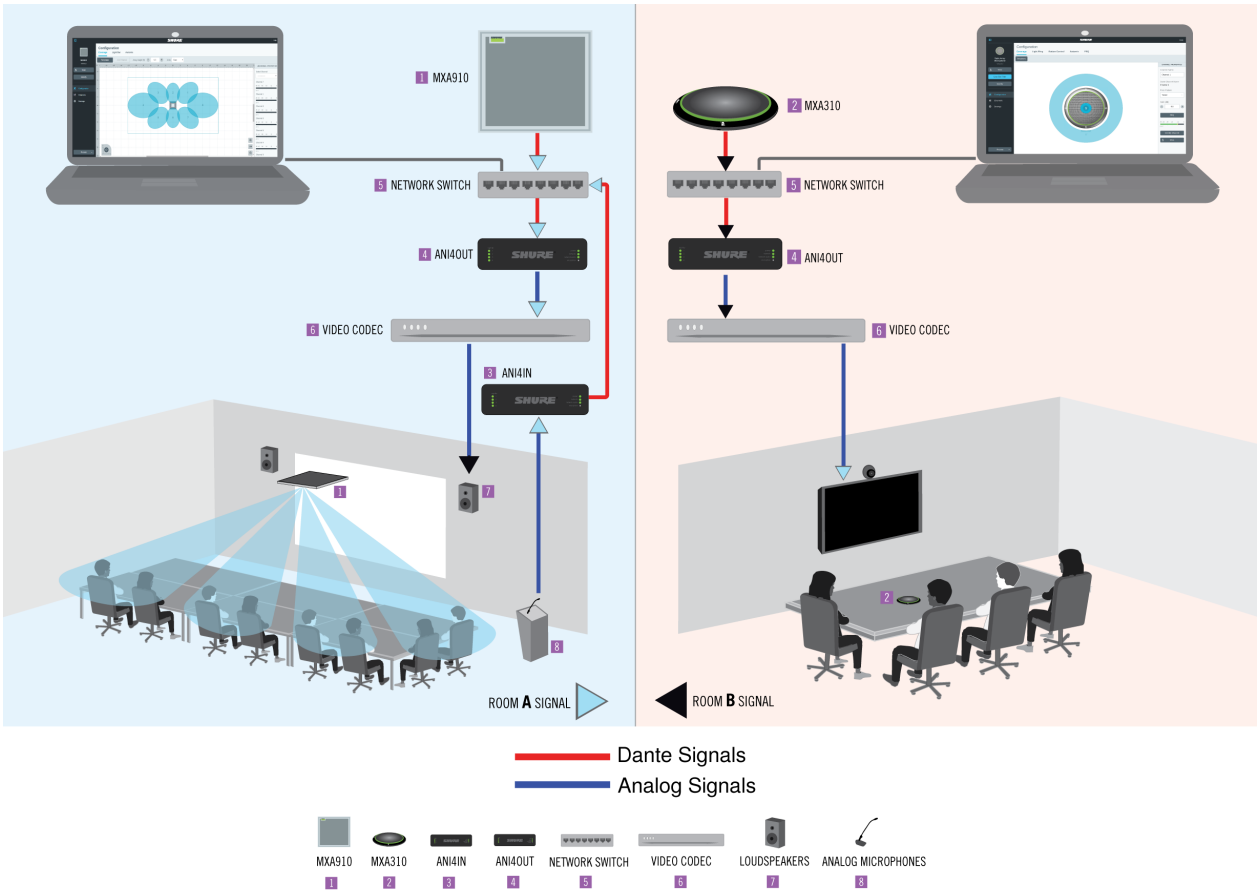

This diagram shows Microflex Advance components in context, with two rooms communicating through video codecs.

Controlling Hardware and Audio Over the Network

Audio and hardware settings are managed through a computer connected to the same network.

Shure Hardware and Audio

Each Microflex Advance component has a web application which provides mixing and configuration tools to optimize sound quality.

Expanded Control for Analog Devices

Analog devices that are connected to the network through a Shure network interface (ANI4IN/ANI4OUT) benefit from additional remote control: Volume levels, equalization, and signal routing are managed through the web application. For example, adjusting loudspeaker volume or muting a wired microphone, which would normally be done from the hardware, can now be controlled remotely over the network.

Dante Signal Routing

You can manage signal routing with Dante Controller software.

Summing

The Audio Network Interface provides channel summing to combine Dante signals from the network, and send them over a single analog output. This makes it possible to send all channels to a device with a limited amount of analog input channels. Mixer functionality does not change; audio channels are simply sent as one combined signal.

Note: When summing is enabled, a limiter is activated to prevent signal overloading. The limiter never applies to the direct outputs, and only affects the summed signal.

To enable, select one of the summing options in the toolbar at the top of the mixer in the channels tab.

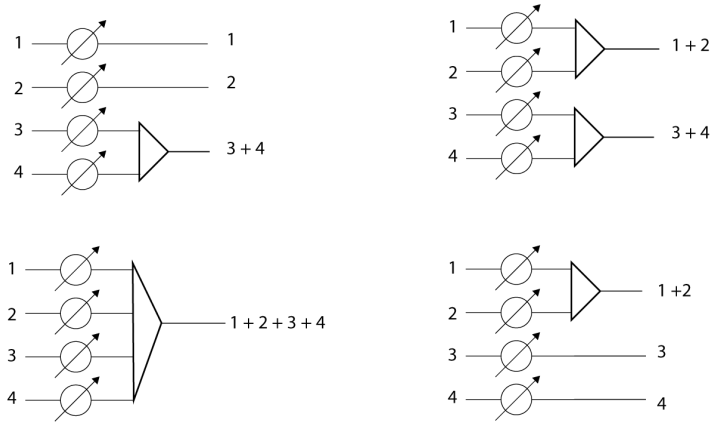

Encryption

Audio is encrypted using the Advanced Encryption Standard (AES -256), as specified by the US Government National Institute of Standards and Technology (NIST) publication FIPS-197. Shure devices that support encryption require a passphrase to make a connection. Encryption is not supported with third-party devices.

To activate encryption:

Tip: enable encryption and set the passphrase for receiving devices first, and then transmitter devices.

1. Open the Settings menu and select the General tab.
2. Select the Enable Encryption checkbox.
3. Enter a passphrase. If this is the first device, set a passphrase to use with all other connected devices. If another device already has a passphrase set, use that same passphrase to establish the encrypted connection.

Important: Encryption must be enabled or disabled on all connected devices.

Software Installation, Management, and Security

Software Installation and Device Discovery

The Shure Web Device Discovery application is used to access the web application for a Shure device. The web application opens in a web browser to provide comprehensive device management. Any computer networked to the device can access the GUI with this application.

Compatible Browsers:

- Chrome
- Safari

- Firefox
- Internet Explorer

1. Install the Shure device discovery application, available at www.shure.com
2. Double-click the component to open the interface.

Accessing the Web Application

The Shure Web Server Discovery application finds all Shure devices on the network that feature a web-based GUI. Follow these steps to install the software and access the web application:

① Install the Shure Discovery application

Download and install the Shure Discovery application from www.shure.com. This automatically installs the required Bonjour device discovery tool on the computer.

② Connect the network

Ensure the computer and the hardware are on the same network.

③ Launch the Discovery application

The app displays all Shure devices that feature a GUI.

④ Identify the hardware

Double-click on a device to open its GUI in a web browser.

⑤ Bookmark the device's web application (recommended)

Bookmark the device's DNS name to access the GUI without the Shure Discovery app.

Accessing the Web Application without the Discovery App

If the Discovery application is not installed, the web application can be accessed by typing the DNS name into an internet browser. The DNS name is derived from model of the unit, in combination with the last three bytes (six digits) of the MAC address, and ending in .local.

Format Example: If the MAC address of a unit is 00:0E:DD:AA:BB:CC, then the link is written as follows:

ANI4IN: http://ANI4IN-aabbcc.local

ANI4OUT: http://ANI4OUT-aabbcc.local

Firmware Updates

Firmware is embedded software in each component that controls functionality. Periodically, new versions of firmware are developed to incorporate additional features and enhancements. To take advantage of design improvements, new versions of the firmware can be uploaded and installed using the Shure Update Utility. Software is available for download from http://www.shure.com.

Important: When components are connected through the Shure MXW Audio Network Interface, their firmware must be updated on one device at a time prior to updating the MXW Audio Network Interface firmware. Attempting to update all devices at once will cause the interface to reboot after its firmware is updated, and the connection to other networked components will be lost.

Perform the following steps to update the firmware:

CAUTION! Ensure the device has a stable network connection during the update. Do not turn off the device until the update is complete.

1. Connect the device and computer to the same network (set to the same subnet).
2. Download Shure Update Utility app and install it.
3. Open the application.
4. Click Check For Updates... button to view new firmware versions available for download.
5. Select the desired firmware and press Downloadto download it to the Firmware Library.
6. From the Update Devices tab, select the new firmware and press Send Updates... to begin the firmware update, which overwrites the existing firmware on the device.

Note: After updating, you may need to clear your browser's cache to display updates to the device's web application.

Firmware Release Requirements

All devices comprise a network with multiple communications protocols that work together to ensure proper operation. The recommended best practice is that all devices are on an identical release. To view the firmware version of each device on the network, open the component user interface, and look under `Settings` > `About`.

The format for Shure device's firmware is MAJOR.MINOR.PATCH. (Ex. 1.6.2 where 1 is the Major firmware level, 6 is the Minor firmware level, and 2 is the Patch firmware level.) At minimum, devices that operate on the same subnet should have identical MAJOR and MINOR release numbers.

- Devices of different MAJOR releases are not compatible.
- Differences in the PATCH firmware release level may introduce undesired inconsistencies.

Parametric Equalizer

Maximize audio quality by adjusting the frequency response with the parametric equalizer.

Common equalizer applications:

- Improve speech clarity
- Reduce noise from HVAC systems or video projectors
- Reduce room irregularities
- Adjust frequency response for reinforcement systems

Setting Filter Parameters

Adjust filter settings by manipulating the icons in the frequency response graph, or by entering numeric values. Disable a filter using the check-box next to the filter.

Filter Type	Only the first and last band have selectable filter types. **Parametric:** Attenuates or boosts the signal within a customizable frequency range **Low Cut:** Rolls off the audio signal below the selected frequency **Low Shelf:** Attenuates or boosts the audio signal below the selected frequency **High Cut:** Rolls off the audio signal above the selected frequency **High Shelf:** Attenuates or boosts the audio signal above the selected frequency
Frequency	Select the center frequency of the filter to cut/boost
Gain	Adjusts the level for a specific filter (+/- 30 dB)
Q Width	Adjusts the range of frequencies affected by the filter. As this value increases, the bandwidth becomes thinner.

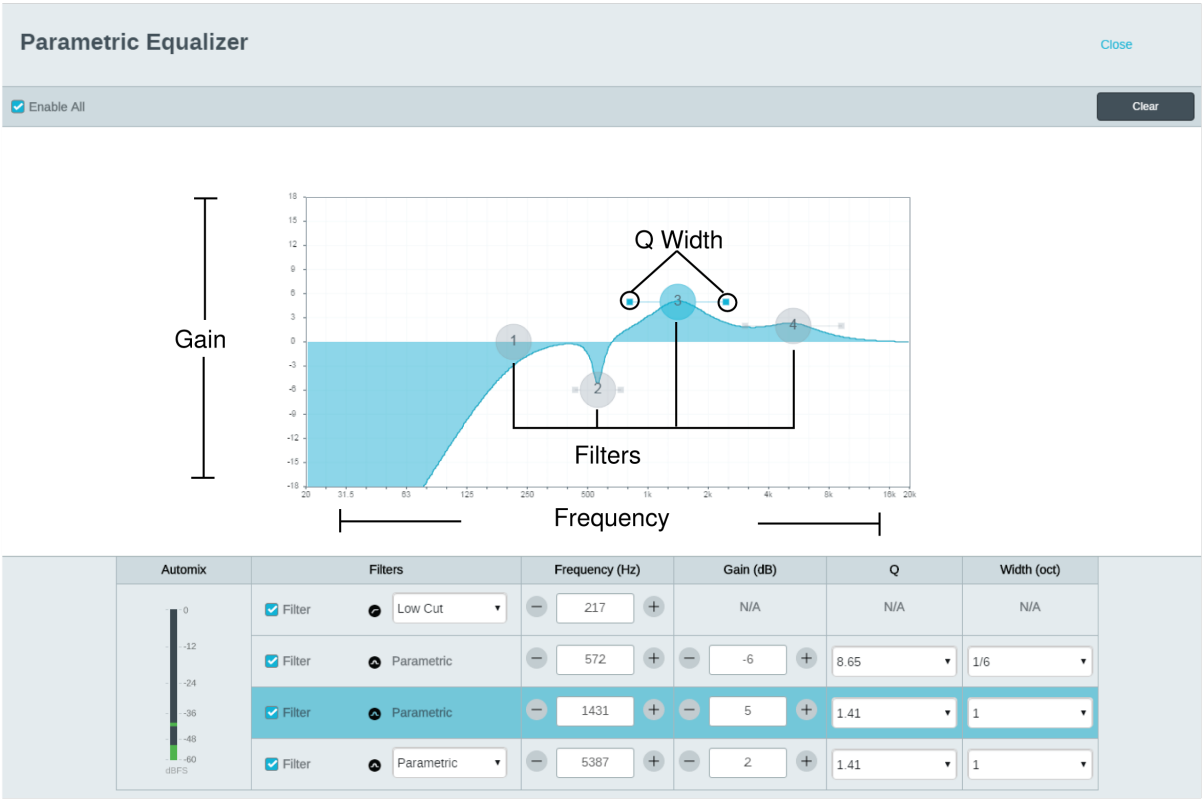

Equalizer Applications

Conferencing room acoustics vary based on room size, shape, and construction materials. Use the guidelines in following table.

EQ Application	Suggested Settings
Treble boost for improved speech intelligibility	Add a high shelf filter to boost frequencies greater than 1 kHz by 3-6 dB
HVAC noise reduction	Add a low cut filter to attenuate frequencies below 200 Hz
Reduce flutter echoes and sibilance	Identify the specific frequency range that "excites" the room: 1. Set a narrow Q value 2. Increase the gain to between +10 and +15 dB, and then experiment with frequencies between 1 kHz and 6 kHz to pinpoint the range of flutter echoes or sibilance 3. Reduce the gain at the identified frequency (start between -3 and -6 dB) to minimize the unwanted room sound
Reduce hollow, resonant room sound	Identify the specific frequency range that "excites" the room: 1. Set a narrow Q value

EQ Application	Suggested Settings
	2. Increase the gain to between +10 and +15 dB, and then experiment with frequencies between 300 Hz and 900 Hz to pinpoint the resonant frequency 3. Reduce the gain at the identified frequency (start between -3 and -6 dB) to minimize the unwanted room sound

Custom Presets

Use presets to quickly save and recall settings. Up to 10 presets can be stored on each device to match various seating arrangements. A preset saves all device settings except for the Device Name, IP Settings, and Passwords. Importing and exporting presets into new installations saves time and improves workflow. When a preset is selected, the name displays above the preset menu. If changes are made, an asterisk appears next to the name.

Note: Use the default settings preset to revert to the factory configuration (excludes Device Name, IP Settings, and Passwords).

Open the presets menu to reveal preset options:

save as preset:	Saves settings to the device
load preset:	Opens a configuration from the device
import from file:	Downloads a preset file from a computer onto the device. Files may be selected through the browser or dragged into the import window.
export to file:	Saves a preset file from the device onto a computer

Event Log

The event log provides a detailed account of activity from the moment the device is powered on. The log collects up to 1,000 activity entries and time-stamps them relative to the last power cycle. The entries are stored in the internal memory, and are not cleared when the device is power-cycled. The Export feature creates a CSV (comma separated values) document to save and sort the log data.

Refer to the log file for details when troubleshooting or consulting with Shure Systems Support.

To view the event log:

1. Open the Help menu
2. Select View Event Log

Severity Level

Information

An action or event has been successfully completed

Warning

An action cannot be complete, but overall functionality is stable

Error

A problem has occurred that could inhibit functionality.

Log Details

Description

Provides details on events and errors, including IP address and subnet mask.

Time Stamp

Power cycles:days:hours:minutes:seconds since most recent boot-up.

Event ID

Indicates event type for internal reference.

Tip: Use the filter to narrow down results. Select a category heading to sort the log.

Levels and Metering

Adjusting Input levels

1. **Check the source level before it reaches the Network Interface:**
   - Verify that the networked microphones or other Dante sources are operating at nominal output levels.
   - Levels for Microflex Advance™ microphones are adjustable through their web application.
2. **Adjust the digital gain in the Network Interface web application:**
   - Use the faders or manually enter a gain value.
   - The digital gain adjusts the level of the signal before it reaches the analog circuitry.
   - Set these levels as high as possible without reaching the peak level (0 dB) on the meter.

Adjusting Output Levels

Access the analog output levels through the web application, by selecting an output level from the Analog Gain (dB) pull-down menu. Match the output level from the Network Interface to the input sensitivity on the analog device:

- Line level (0 dB)
- Aux level (-20 dB)
- Microphone level (-46 dB)

LED Signal and Clipping Indicators

Each analog output channel has a corresponding LED:

Green: Audio signal present
Red: Audio signal is clipping and should be attenuated.

Note: the meters in the web application are not affected by the Analog Gain (dB) setting.

Pre- and Post-Fader Metering

There are two modes for monitoring so that both the input and output signals can be monitored separately.

When set to **pre-fader**, the meter displays the signal level from the source on the Dante network. If signals are too low or clipping, adjust them at the source.

When set to **post-fader**, the meter is affected by the digital gain. It is not affected by the output analog gain setting.

Using a Third-Party Control System

This device receives logic commands over the network. Many parameters controlled through the web application can be controlled through a third-party control system, using the appropriate command string.

Common applications:

- Mute
- LED color and behavior
- Loading presets
- Adjusting levels

A complete list of command strings is available in the device help or from:

pubs.shure.com/command-strings/ANI4OUT.

Networking and Dante

Digital Audio Networking

Dante digital audio is carried over standard Ethernet and operates using standard internet protocols. Dante provides low latency, tight clock synchronization, and high Quality-of-Service (QoS) to provide reliable audio transport to a variety of Dante devices. Dante audio can coexist safely on the same network as IT and control data, or can be configured to use a dedicated network.

Switch and Cable Recommendations for Dante Networking

Switches and cables determine how well your audio network performs. Use high-quality switches and cables to make your audio network more reliable.

Network switches should have:

- Gigabit ports. 10/100 switches may work on small networks, but gigabit switches perform better.
- Power over Ethernet (PoE) or PoE+ ports for any devices that require power
- Management features to provide information about port speed, error counters, and bandwidth used
- Ability to switch off Energy Efficient Ethernet (EEE). EEE (also known as "Green Ethernet") may cause audio dropouts and problems with clock synchronization.
- Diffserv (DSCP) Quality of Service (QoS) with strict priority and 4 queues

Ethernet cables should be:

- Cat5e or better
- Shielded

Compatibility with Dante Domain Manager

This device is compatible with Dante Domain Manager software (DDM). DDM is network management software with user authentication, role-based security, and auditing features for Dante networks and Dante-enabled products.

Considerations for Shure devices controlled by DDM:

- When you add Shure devices to a Dante domain, set the local controller access to Read Write. Otherwise, you won't be able to access to Dante settings, perform a factory reset, or update device firmware.

- If the device and DDM can't communicate over the network for any reason, you won't be able to control Dante settings, perform a factory reset, or update device firmware. When the connection is reestablished, the device follows the policy set for it in the Dante domain.
- If Dante device lock is on, DDM is offline, or the configuration of the device is set to Prevent, some device settings are disabled. These include: Dante encryption, MXW association, AD4 Dante browse and Dante cue, and SCM820 linking.

See Dante Domain Manager's documentation for more information.

QoS (Quality of Service) Settings

QoS settings assign priorities to specific data packets on the network, ensuring reliable audio delivery on larger networks with heavy traffic. This feature is available on most managed network switches. Although not required, assigning QoS settings is recommended.

Note: Coordinate changes with the network administrator to avoid disrupting service.

To assign QoS values, open the switch interface and use the following table to assign Dante®-associated queue values.

- Assign the highest possible value (shown as 4 in this example) for time-critical PTP events
- Use descending priority values for each remaining packet.

Dante QoS Priority Values

Priority	Usage	DSCP Label	Hex	Decimal	Binary
High (4)	Time-critical PTP events	CS7	0x38	56	111000
Medium (3)	Audio, PTP	EF	0x2E	46	101110
Low (2)	(reserved)	CS1	0x08	8	001000
None (1)	Other traffic	BestEffort	0x00	0	000000

Note: Switch management may vary by manufacturer and switch type. Consult the manufacturer's product guide for specific configuration details.

For more information on Dante requirements and networking, visit www.audinate.com.

Networking Terminology

PTP (Precision Time Protocol): Used to synchronize clocks on the network
DSCP (Differentiated Services Code Point): Standardized identification method for data used in layer 3 QoS prioritization

Dante Transmit Flows

This device supports up to **two transmit flows** and **two receive flows**. A single flow consists of up to **four channels**, through either a unicast or multicast transmission.

- A **unicast flow** is a point-to-point connection between two devices, supporting up to four channels per flow.
- A **multicast flow** is a one-to-many transmission, which supports sending up to four channels to multiple receiving devices across the network.

Shure Device Applications

This device can connect with up to two Dante devices.

The Shure MXA310, ANI22, ANIUSB-MATRIX and ANI4IN support multicast transmission. This means that flows can transmit to multiple devices -- as many as the network can support. If using unicast flows, each of these devices can connect with up to two Dante receiver devices.

The Shure ANI4OUT connects with up to two Dante transmitter devices.

Packet Bridge

Packet bridge enables an external controller to obtain IP information from the control interface of a Shure device. To access the packet bridge, an external controller must send a query packet over **unicast UDP*** to **port 2203** on the Dante interface of the Shure device.

1. Send a UDP packet with a minimum 1-byte payload .

   Note: *The maximum accepted payload 140 bytes. Any content is allowed.*

2. The Shure device will send a response packet over unicast UDP to the controller, using a destination UDP port identical to the source port of the query packet. The payload of the response packet follows this format:

Bytes	Content
0-3	IP address, as 32-bit unsigned integer in network order
4-7	Subnet mask, as 32-bit unsigned integer in network order
8-13	MAC address, as array of 6 bytes

   Note: *The Shure device should respond in less than one second on a typical network. If there is no response, try sending the query again after verifying the destination IP address and port number.*

***UDP:** User Datagram Protocol

Important Product Information

The equipment is intended to be used in professional audio applications.

Note: This device is not intended to be connected directly to a public internet network.

EMC conformance to Environment E2: Commercial and Light Industrial. Testing is based on the use of supplied and recommended cable types. The use of other than shielded (screened) cable types may degrade EMC performance.

Changes or modifications not expressly approved by Shure Incorporated could void your authority to operate this equipment.

Industry Canada ICES-003 Compliance Label: CAN ICES-3 (B)/NMB-3(B)

Authorized under the verification provision of FCC Part 15B.

Please follow your regional recycling scheme for batteries, packaging, and electronic waste.

Information to the user

This equipment has been tested and found to comply with the limits for a Class B digital device, pursuant to part 15 of the FCC Rules. This equipment generates, uses, and can radiate radio frequency energy and, if not installed and used in accordance with the manufacturer's instruction manual, may cause interference with radio and television reception.

Notice: The FCC regulations provide that changes or modifications not expressly approved by Shure Incorporated could void your authority to operate this equipment.

These limits are designed to provide reasonable protection against harmful interference in a residential installation. This equipment generates, uses, and can radiate radio frequency energy and, if not installed and used in accordance with the instructions, may cause harmful interference to radio communications. However, there is no guarantee that interference will not occur in a particular installation. If this equipment does cause harmful interference to radio or television reception, which can be de-

termined by turning the equipment off and on, the user is encouraged to try to correct the interference by one or more of the following measures:

- Reorient or relocate the receiving antenna.
- Increase the separation between the equipment and the receiver.
- Connect the equipment to an outlet on a circuit different from that to which the receiver is connected.
- Consult the dealer or an experienced radio/TV technician for help.

This device complies with part 15 of the FCC Rules. Operation is subject to the following two conditions:

1. This device may not cause harmful interference.
2. This device must accept any interference received, including interference that may cause undesired operation.

The CE Declaration of Conformity can be obtained from: www.shure.com/europe/compliance

Authorized European representative:
Shure Europe GmbH
Global Compliance
Jakob-Dieffenbacher-Str. 12
75031 Eppingen, Germany
Phone: +49-7262-92 49 0
Email: info@shure.de
www.shure.com

This product meets the Essential Requirements of all relevant European directives and is eligible for CE marking.

The CE Declaration of Conformity can be obtained from Shure Incorporated or any of its European representatives. For contact information please visit www.shure.com

Specifications

General

Input

(1) RJ45

Outputs

ANI4OUT-XLR	(4) XLR connector
ANI4OUT-BLOCK	(4) 3-pin block connector

Configuration

Impedance Balanced

Polarity

Non-inverting, any input to any output

Power Requirements

Power over Ethernet (PoE), Class 0

Power Consumption

10W, maximum

Weight
663 g (1.5 lbs)

Dimensions
H x W x D

4 x 14 x 12.8 cm (1.6 x 5.5 x 5.0 in.)

control application
HTML5 Browser-based

Operating Temperature Range
−6.7°C (20°F) to 40°C (104°F)

Storage Temperature Range
−29°C (-20°F) to 74°C (165°F)

Audio

Frequency Response
20 to 20,000 Hz

Input (Dante Digital Audio)

Channel Count	4
Sampling Rate	48 kHz
Bit Depth	24

Latency
Does not include Dante latency

0.71 ms

Dynamic Range (Dante-to-Analog)
20 Hz to 20 kHz, A-weighted, typical

117 dB

Total Harmonic Distortion
@ 1 kHz, -20 dBFS Output, 0 dB analog gain

<0.05%

Output Clipping Level

Line	+20 dBV
Aux	+0 dBV
Mic	-26 dBV

Analog Output Level

Selectable	Line	0 dB

	Aux	- 20 dB
	Mic	-46 dB

Output Impedance

150 Ω

Built-in Digital Signal Processing

Per Channel	Equalizer (4-band Parametric) , Mute, Invert Polarity, Gain (140 dB range)
System	Audio Summing

Networking

Cable Requirements

Cat 5e or higher (shielded cable recommended)

IP Ports and Protocols

Shure Control

Port	TCP/UDP	Protocol	Description	Factory Default
21	TCP	FTP	Required for firmware updates (otherwise closed)	Closed
22	TCP	SSH	Secure Shell Interface	Closed
23	TCP	Telnet	Not supported	Closed
53	UDP	DNS	Domain Name System	Closed
67	UDP	DHCP	Dynamic Host Configuration Protocol	Open
68	UDP	DHCP	Dynamic Host Configuration Protocol	Open
80*	TCP	HTTP	Required to launch embedded web server	Open
443	TCP	HTTPS	Not supported	Closed
2202	TCP	ASCII	Required for 3rd party control strings	Open
5353	UDP	mDNS†	Required for device discovery	Open
5568	UDP	SDT (multicast)†	Required for inter-device communication	Open
57383	UDP	SDT (unicast)	Required for inter-device communication	Open
8023	TCP	Telnet	Debug console interface	Closed
8180	TCP	HTML	Required for web application (legacy firmware only)	Open
8427	UDP	SLP (multicast)†	Required for inter-device communication	Open
64000	TCP	Telnet	Required for Shure firmware update	Open

*These ports must be open on the PC or control system to access the device through a firewall.

†These protocols require multicast. Ensure multicast has been correctly configured for your network.

See Audinate's website for information about ports and protocols used by Dante audio.

Accessories

Furnished Accessories

Hardware kit (XLR model)	90A29254
Hardware kit (block connector model)	90A29252
Mounting Bracket (1/3 rack unit)	53A27742

Optional Accessories and Replacement Parts

19" rack tray	CRT1