YAMAHA

DIGITAL MIXING SYSTEM

RIVAGE PM7

DIGITAL MIXING CONSOLE

CSD-R7

System Setup Guide

EN

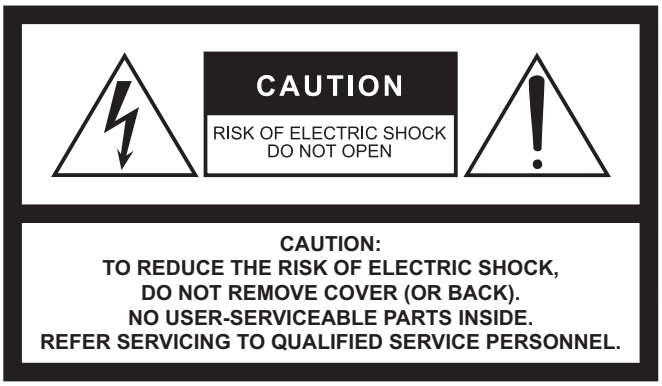

The above warning is located on the rear of the unit.



L'avertissement ci-dessus est situé sur l'arrière de l'unité.

Explanation of Graphical Symbols
Explication des symboles



The lightning flash with arrowhead symbol within an equilateral triangle is intended to alert the user to the presence of uninsulated "dangerous voltage" within the product's enclosure that may be of sufficient magnitude to constitute a risk of electric shock to persons.

L'éclair avec une flèche à l'intérieur d'un triangle équilatéral est destiné à attirer l'attention de l'utilisateur sur la présence d'une « tension dangereuse » non isolée à l'intérieur de l'appareil, pouvant être suffisamment élevée pour constituer un risque d'électrocution.



The exclamation point within an equilateral triangle is intended to alert the user to the presence of important operating and maintenance (servicing) instructions in the literature accompanying the product.

Le point d'exclamation à l'intérieur d'un triangle équilatéral est destiné à attirer l'attention de l'utilisateur sur la présence d'instructions importantes sur l'emploi ou la maintenance (réparation) de l'appareil dans la documentation fournie.

IMPORTANT SAFETY INSTRUCTIONS

1 **Read these instructions.**
2 **Keep these instructions.**
3 **Heed all warnings.**
4 **Follow all instructions.**
5 **Do not use this apparatus near water.**
6 **Clean only with dry cloth.**
7 **Do not block any ventilation openings. Install in accordance with the manufacturer's instructions.**
8 **Do not install near any heat sources such as radiators, heat registers, stoves, or other apparatus (including amplifiers) that produce heat.**
9 **Do not defeat the safety purpose of the polarized or grounding-type plug. A polarized plug has two blades with one wider than the other. A grounding type plug has two blades and a third grounding prong. The wide blade or the third prong are provided for your safety. If the provided plug does not fit into your outlet, consult an electrician for replacement of the obsolete outlet.**
10 **Protect the power cord from being walked on or pinched particularly at plugs, convenience receptacles, and the point where they exit from the apparatus.**
11 **Only use attachments/accessories specified by the manufacturer.**
12 **Use only with the cart, stand, tripod, bracket, or table specified by the manufacturer, or sold with the apparatus. When a cart is used, use caution when moving the cart/apparatus combination to avoid injury from tip-over.**



13 **Unplug this apparatus during lightning storms or when unused for long periods of time.**
14 **Refer all servicing to qualified service personnel. Servicing is required when the apparatus has been damaged in any way, such as power-supply cord or plug is damaged, liquid has been spilled or objects have fallen into the apparatus, the apparatus has been exposed to rain or moisture, does not operate normally, or has been dropped.**

WARNING
TO REDUCE THE RISK OF FIRE OR ELECTRIC SHOCK, DO NOT EXPOSE THIS APPARATUS TO RAIN OR MOISTURE.

(UL60065_03)

PRÉCAUTIONS CONCERNANT LA SÉCURITÉ

1 **Lire ces instructions.**
2 **Conserver ces instructions.**
3 **Tenir compte de tous les avertissements.**
4 **Suivre toutes les instructions.**
5 **Ne pas utiliser ce produit à proximité d'eau.**
6 **Nettoyer uniquement avec un chiffon propre et sec.**
7 **Ne pas bloquer les orifices de ventilation. Installer l'appareil conformément aux instructions du fabricant.**
8 **Ne pas installer l'appareil à proximité d'une source de chaleur comme un radiateur, une bouche de chaleur, un poêle ou tout autre appareil (y compris un amplificateur) produisant de la chaleur.**
9 **Ne pas modifier le système de sécurité de la fiche polarisée ou de la fiche de terre. Une fiche polarisée dispose de deux broches dont une est plus large que l'autre. Une fiche de terre dispose de deux broches et d'une troisième pour le raccordement à la terre. Cette broche plus large ou cette troisième broche est destinée à assurer la sécurité de l'utilisateur. Si la fiche équipant l'appareil n'est pas compatible avec les prises de courant disponibles, faire remplacer les prises par un électricien.**
10 **Acheminer les cordons d'alimentation de sorte qu'ils ne soient pas piétinés ni coincés, en faisant tout spécialement attention aux fiches, prises de courant et au point de sortie de l'appareil.**
11 **Utiliser exclusivement les fixations et accessoires spécifiés par le fabricant.**
12 **Utiliser exclusivement le chariot, le stand, le trépied, le support ou la table recommandés par le fabricant ou vendus avec cet appareil. Si l'appareil est posé sur un chariot, déplacer le chariot avec précaution pour éviter tout risque de chute et de blessure.**



13 **Débrancher l'appareil en cas d'orage ou lorsqu'il doit rester hors service pendant une période prolongée.**
14 **Confier toute réparation à un personnel qualifié. Faire réparer l'appareil s'il a subi tout dommage, par exemple si la fiche ou le cordon d'alimentation est endommagé, si du liquide a coulé ou des objets sont tombés à l'intérieur de l'appareil, si l'appareil a été exposé à la pluie ou à de l'humidité, si l'appareil ne fonctionne pas normalement ou est tombé.**

AVERTISSEMENT
POUR RÉDUIRE LES RISQUES D'INCENDIE OU DE DÉCHARGE ÉLECTRIQUE, N'EXPOSEZ PAS CET APPAREIL À LA PLUIE OU À L'HUMIDITÉ.

(UL60065_03)

FCC INFORMATION (U.S.A.)

1. **IMPORTANT NOTICE: DO NOT MODIFY THIS UNIT!**
   This product, when installed as indicated in the instructions contained in this manual, meets FCC requirements. Modifications not expressly approved by Yamaha may void your authority, granted by the FCC, to use the product.
2. **IMPORTANT:** When connecting this product to accessories and/or another product use only high quality shielded cables. Cable/s supplied with this product MUST be used. Follow all installation instructions. Failure to follow instructions could void your FCC authorization to use this product in the USA.
3. **NOTE:** This product has been tested and found to comply with the requirements listed in FCC Regulations, Part 15 for Class "B" digital devices. Compliance with these requirements provides a reasonable level of assurance that your use of this product in a residential environment will not result in harmful interference with other electronic devices. This equipment generates/uses radio frequencies and, if not installed and used according to the instructions found in the users manual, may cause interference harmful to the operation of other electronic devices. Compliance with FCC regulations does not guarantee that interference will not occur in all installations. If this product is found to be the source of interference, which can be determined by turning the unit "OFF" and "ON", please try to eliminate the problem by using one of the following measures:

   Relocate either this product or the device that is being affected by the interference.

   Utilize power outlets that are on different branch (circuit breaker or fuse) circuits or install AC line filter/s.

   In the case of radio or TV interference, relocate/reorient the antenna. If the antenna lead-in is 300 ohm ribbon lead, change the lead-in to co-axial type cable.

   If these corrective measures do not produce satisfactory results, please contact the local retailer authorized to distribute this type of product. If you can not locate the appropriate retailer, please contact Yamaha Corporation of America, Electronic Service Division, 6600 Orangethorpe Ave, Buena Park, CA90620

   The above statements apply ONLY to those products distributed by Yamaha Corporation of America or its subsidiaries.

(class B)

ADVARSEL!
Lithiumbatteri—Eksplosionsfare ved fejlagtig håndtering. Udskiftning må kun ske med batteri af samme fabrikat og type. Levér det brugte batteri tilbage til leverandoren.

VARNING
Explosionsfara vid felaktigt batteribyte. Använd samma batterityp eller en ekvivalent typ som rekommenderas av apparattillverkaren. Kassera använt batteri enligt fabrikantens instruktion.

VAROITUS
Paristo voi räjähtää, jos se on virheellisesti asennettu. Vaihda paristo ainoastaan laitevalmistajan suosittelemaan tyyppiin. Hävitä käytetty paristo valmistajan ohjeiden mukaisesti.

(lithium caution)

NEDERLAND / THE NETHERLANDS

- Dit apparaat bevat een lithium batterij voor geheugen back-up.
- This apparatus contains a lithium battery for memory back-up.
- Raadpleeg uw leverancier over de verwijdering van de batterij op het moment dat u het apparaat ann het einde van de levensduur of gelieve dan contact op te nemen met de vertegenwoordiging van Yamaha in uw land.
- For the removal of the battery at the moment of the disposal at the end of life please consult your retailer or Yamaha representative office in your country.
- Gooi de batterij niet weg, maar lever hem in als KCA.
- Do not throw away the battery. Instead, hand it in as small chemical waste.

(lithium disposal)

This product contains a battery that contains perchlorate material.
Perchlorate Material—special handling may apply,
See www.dtsc.ca.gov/hazardouswaste/perchlorate.

* This applies only to products distributed by YAMAHA CORPORATION OF AMERICA.

(Perchlorate)

COMPLIANCE INFORMATION STATEMENT (DECLARATION OF CONFORMITY PROCEDURE)

Responsible Party :	Yamaha Corporation of America
Address :	6600 Orangethorpe Ave., Buena Park, Calif. 90620
Telephone :	714-522-9011
Type of Equipment :	DIGITAL MIXING CONSOLE
Model Name :	CSD-R7

This device complies with Part 15 of the FCC Rules.
Operation is subject to the following two conditions:
1) this device may not cause harmful interference, and
2) this device must accept any interference received including interference that may cause undesired operation.
See user manual instructions if interference to radio reception is suspected.

(FCC DoC)

이 기기는 가정용(B급) 전자파적합기기로서 주로 가정에서 사용하는 것을 목적으로 하며, 모든 지역에서 사용할 수 있습니다.

(class b korea)

PRECAUTIONS

PLEASE READ CAREFULLY BEFORE PROCEEDING

Please keep this manual in a safe place for future reference.

⚠ WARNING

Always follow the basic precautions listed below to avoid the possibility of serious injury or even death from electrical shock, short-circuiting, damages, fire or other hazards. These precautions include, but are not limited to, the following:

Power supply/power cord

- Do not place the power cord near heat sources such as heaters or radiators, and do not excessively bend or otherwise damage the cord, place heavy objects on it, or place it in a position where anyone could walk on, trip over, or roll anything over it.
- Only use the voltage specified as correct for the device. The required voltage is printed on the name plate of the device.
- Use only the supplied power cord/plug.
  If you intend to use the device in an area other than in the one you purchased, the included power cord may not be compatible. Please check with your Yamaha dealer.
- Check the electric plug periodically and remove any dirt or dust which may have accumulated on it.
- When setting up the device, make sure that the AC outlet you are using is easily accessible. If some trouble or malfunction occurs, immediately turn off the power switch and disconnect the plug from the outlet. Even when the power switch is turned off, as long as the power cord is not unplugged from the wall AC outlet, the device will not be disconnected from the power source.
- Remove the electric plug from the outlet when the device is not to be used for extended periods of time, or during electrical storms.
- Be sure to connect to an appropriate outlet with a protective grounding connection.



Shock hazard

Disconnect all power sources.

This device receives power from multi sources. When setting up the device, make sure that the AC outlet you are using is easily accessible. If some trouble or malfunction occurs, immediately turn off the power switch and disconnect the all plugs from the outlet. Even when the power switch is turned off, as long as the power cord is not unplugged from the wall AC outlet, the device will not be disconnected from the power source.

Do not open

- This device contains no user-serviceable parts. Do not open the device or attempt to disassemble the internal parts or modify them in any way. If it should appear to be malfunctioning, discontinue use immediately and have it inspected by qualified Yamaha service personnel.

Water warning

- Do not expose the device to rain, use it near water or in damp or wet conditions, or place on it any containers (such as vases, bottles or glasses) containing liquids which might spill into any openings. If any liquid such as water seeps into the device, turn off the power immediately and unplug the power cord from the AC outlet. Then have the device inspected by qualified Yamaha service personnel.
- Never insert or remove an electric plug with wet hands.

Hearing loss

- Avoid setting all equalizer controls and faders to their maximum. Depending on the condition of the connected devices, doing so may result in feedback that can cause hearing loss and damage the speakers.
- Do not use headphones for a long period of time at a high or uncomfortable volume level, since this can cause permanent hearing loss. If you experience any hearing loss or ringing in the ears, consult a physician.
- Before connecting the device to other devices, turn off the power for all devices. Also, before turning the power of all devices on or off, make sure that all volume levels are set to the minimum. Failing to do so may result in hearing loss, electric shock, or device damage.
- When turning on the AC power in your audio system, always turn on the power amplifier LAST, to avoid hearing loss and speaker damage. When turning the power off, the power amplifier should be turned off FIRST for the same reason.

Fire warning

- Do not place any burning items or open flames near the device, since they may cause a fire.

If you notice any abnormality

- If any of the following problems occur, immediately turn off the power switch and disconnect the electric plug from the outlet.
  - The power cord or plug becomes frayed or damaged.
  - Unusual smells or smoke are emitted.
  - Some object has been dropped into the device.
  - There is a sudden loss of sound during use of the device.
  - Cracks or other visible damage appear on the device.

  Then have the device inspected or repaired by qualified Yamaha service personnel.
- If this device should be dropped or damaged, immediately turn off the power switch, disconnect the electric plug from the outlet, and have the device inspected by qualified Yamaha service personnel.

⚠ CAUTION

Always follow the basic precautions listed below to avoid the possibility of physical injury to you or others, or damage to the device or other property. These precautions include, but are not limited to, the following:

Power supply/power cord

- When removing the electric plug from the device or an outlet, always hold the plug itself and not the cord. Pulling by the cord can damage it.
- To disconnect the device from the mains, unplug both power cords.

Location

- Do not place the device in an unstable position where it might accidentally fall over and cause injuries.
- Do not block the vents. This device has ventilation holes at the rear/under the front to prevent the internal temperature from becoming too high. In particular, do not place the device on its side or upside down. Inadequate ventilation can result in overheating, possibly causing damage to the device(s), or even fire.
- Do not place the device in a location where it may come into contact with corrosive gases or salt air. Doing so may result in malfunction.
- Avoid being near the device during a disaster, such as an earthquake. Since the device may turn over or fall and cause injury, stay away from the device quickly and move to a safe place.
- Before moving the device, remove all connected cables.
- When transporting or moving the device, always use four or more people. This device must be lifted by a group of four or more people. Otherwise, personal injuries, such as back or shoulder injuries, or damage to the device may result.
- Keep device away from the reach of children.

Maintenance

- Remove the power plug from the AC outlet when cleaning the device.

Handling caution

- Do not insert your fingers or hands in any gaps or openings on the device (vents, panel, etc.).
- Avoid inserting or dropping foreign objects (paper, plastic, metal, etc.) into any gaps or openings on the device (vents, panel, etc.) If this happens, immediately turn off the power, unplug the power cord from the AC outlet, and have the device inspected by qualified Yamaha service personnel.
- Do not rest your weight on the device or place heavy objects on it. Avoid applying excessive force to the buttons, switches or connectors to prevent injuries.

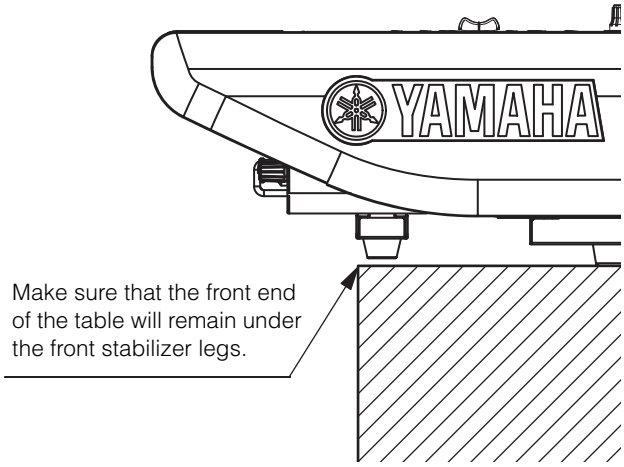

- Avoid pulling the connected cables to prevent injuries or damage to the device by causing it to fall.

Backup battery

- Do not replace the backup battery by yourself. Doing so may cause an explosion and/or damage to the device(s).
  If the backup battery power is fully depleted, contact your Yamaha dealer and have qualified Yamaha service personnel replace the backup battery.

Yamaha cannot be held responsible for damage caused by improper use or modifications to the device, or data that is lost or destroyed.

NOTICE

To avoid the possibility of malfunction/ damage to the product, damage to data, or damage to other property, follow the notices below.

Handling and maintenance

- Do not use the device in the vicinity of a TV, radio, AV equipment, mobile phone, or other electric devices. Otherwise, the device, TV, or radio may generate noise.
- Do not expose the device to excessive dust or vibration, or extreme cold or heat (such as in direct sunlight, near a heater, or in a car during the day), in order to prevent the possibility of panel disfiguration, unstable operation, or damage to the internal components.
- Do not place vinyl, plastic or rubber objects on the device, since this might discolor the panel.
- When cleaning the device, use a dry and soft cloth. Do not use paint thinners, solvents, cleaning fluids, or chemical-impregnated wiping cloths.
- Condensation can occur in the device due to rapid, drastic changes in ambient temperature—when the device is moved from one location to another, or air conditioning is turned on or off, for example. Using the device while condensation is present can cause damage. If there is reason to believe that condensation might have occurred, leave the device for several hours without turning on the power until the condensation has completely dried out.
- During extreme changes in temperature or humidity, condensation may occur and water may collect on the surface of the device. If water is left, the wooden parts may absorb the water and be damaged. Make sure to wipe any water off immediately with a soft cloth.
- Do not apply oil, grease, or contact cleaner to the faders. Doing so may cause problems with electrical contact or fader motion.
- Even when the [⏻] (Standby/On) switch is in standby status (power lamp is off/ display is off), electricity is still flowing to the instrument at the minimum level. When you are not using the instrument for a long time, make sure you unplug the power cord from the wall AC outlet.

Saving data

- This device has a built-in backup battery that maintains clock data even when the device's power is switched off. The backup battery will eventually become depleted, however, and when that happens the clock data will be lost. To prevent loss of data be sure to replace the backup battery before it becomes fully depleted. If you need to replace the backup battery, then have qualified Yamaha service personnel replace the backup battery. The average life of the internal backup battery is approximately 5 years, depending on operating conditions.

Connectors

- XLR-type connectors are wired as follows (IEC60268 standard): pin 1: ground, pin 2: hot (+), and pin 3: cold (–).

Information

About copyrights

Copying of the commercially available musical data including but not limited to MIDI data and/or audio data is strictly prohibited except for your personal use.

About functions/data bundled with the product

- Supply of this product does not convey a license nor imply any right to distribute content created with this product in revenue-generating broadcast systems (terrestrial, satellite, cable and/or other distribution channels), streaming applications (via Internet, intranets and/or other networks), other content distribution systems (pay-audio or audio-ondemand applications and the like) or on physical media (compact discs, digital versatile discs, semiconductor chips, hard drives, memory cards and the like). An independent license for such use is required. For details, please visit http://mp3licensing.com.

About this manual

- The illustrations and LCD screens as shown in this manual are for instructional purposes only.
- Windows is a registered trademark of Microsoft® Corporation in the United States and other countries.
- Apple, Mac, Macintosh, and iPad are trademarks of Apple Inc., registered in the U.S. and other countries.
- The company names and product names in this manual are the trademarks or registered trademarks of their respective companies.
- Software may be revised and updated without prior notice.

The model number, serial number, power requirements, etc., may be found on or near the name plate, which is at the rear of the unit. You should note this serial number in the space provided below and retain this manual as a permanent record of your purchase to aid identification in the event of theft.

Model No.

Serial No.

(rear_en_01)

Information for users on collection and disposal of old equipment:



This symbol on the products, packaging, and/or accompanying documents means that used electrical and electronic products should not be mixed with general household waste. For proper treatment, recovery and recycling of old products, please take them to applicable collection points, in accordance with your national legislation.

By disposing of these products correctly, you will help to save valuable resources and prevent any potential negative effects on human health and the environment which could otherwise arise from inappropriate waste handling.

For more information about collection and recycling of old products, please contact your local municipality, your waste disposal service or the point of sale where you purchased the items.

For business users in the European Union:
If you wish to discard electrical and electronic equipment, please contact your dealer or supplier for further information.

Information on Disposal in other Countries outside the European Union:
This symbol is only valid in the European Union. If you wish to discard these items, please contact your local authorities or dealer and ask for the correct method of disposal.

(weee_eu_en_02)

European models
Purchaser/User Information specified in EN55103-2:2009.
Conforms to Environments: E1, E2, E3 and E4

Contents

Introduction 8
- Main Features 8
- About manuals..... 8
- About utility software..... 9
- Firmware updates 9
- Conventions in this manual..... 9
- Accessories..... 9

System Overview.....10
- Introducing the devices..... 10
- About network card 11

About Dante 12
- Caution when using a network switch..... 12

About Connections 12
- Daisy Chain Network 12
- Star Network..... 13

Part Names & Functions 14
- Top panel 14
- Front panel 26
- Rear panel 27

Power Supply 30
- Connecting to power sources..... 30

Installing and Removing Optional Cards 30
- Installing a Mini-YGDAI card 30
- Removing the Mini-YGDAI card..... 31
- Installing an HY card 31
- Removing an HY Card..... 32

Touch Screen 33
- Basic touch screen operations 33
- On-screen user interface..... 33
- Viewing a touch screen 34

Quick Guide 35
- Basic system configuration 35
- Installing an optional card 35
- Setting the Unit ID 36
- Connecting the devices..... 37
- Turning on the power to the RIVAGE PM7 system 37
- Setting the word clock 38
- Assigning channels to the TWINLANe network 38
- Patching the input ports..... 40
- Patching the output ports 41
- Setting the analog gain for HA (Head Amp) 42
- Sending an input channel signal to the STEREO bus..... 42
- Check list 44

Other Operations.....45
- Initializing the unit to factory default settings 45
- Adjusting the faders (Calibration function)..... 45

Troubleshooting 47

Specifications 48
- General Specifications 48
- Pin Assignment Table 52
- Dimensional Diagrams 53

Index.....54

Introduction

Thank you for purchasing the Yamaha RIVAGE PM7 digital mixing system. This product is suitable for the use in a large-scale hall or event. This manual provides the information and procedures required for audio installation companies to plan and set up the audio system. It also describes the set-up procedure and basic operation for mixing engineers. In order to take full advantage of this system's superior functionality and enjoy years of trouble-free use, please read this manual before you use the product. After you have read the manual, keep it in a safe place for future reference.

Main Features

The RIVAGE PM7 system features superb sound quality, intuitive controls, and innovative functionality. It is a state-of-the-art mixing system that supports a variety of applications.

Superb sound quality

The design of the RIVAGE PM7 digital mixing system is an uncomprised expression of Yamaha's philosophy of Pro Audio device design. This philosophy is called "white canvas," and suggests that the ideal starting point for sonic creativity is pure, natural reproduction achieved through the use of high quality analog circuits. Only then can sound be colored effectively by a variety of aural paints for the desired creative impact. Numerous processing options (such as plug-ins, SILK, etc.) enable powerful sound production capabilities in the digital domain. Through a fusion of analog and digital technologies, the RIVAGE PM7 has achieved both the creation of a pure, transparent sound, and fluid capabilities for coloring that sound.

Intuitive controls

The RIVAGE PM7 features a farther advanced top panel controls, including large touch panel screens, a full implementation of Yamaha's acclaimed Selected Channel interface, and highly user-friendly USER DEFINED KEYS/KNOBS section and TOUCH AND TURN knobs. This feature provides the system's extraordinary operability.

Innovative functionality

The RIVAGE PM7 also features abundant inputs and outputs; flexible signal routing; powerful DSP processing with two insert points; and scene memory and library management that supports an enormous amount of sophisticated requirements. The system also provides numerous benefits for users by maintaining reliability through power and network redundancy.

These core features are supported by state-of-the-art technologies and an advanced level of product reliability that have been cultivated through years of experience in developing digital mixing consoles, such as the PM1D and PM5D. The deep passion of Yamaha's engineering team has been infused into the RIVAGE PM7.

About manuals

- **RIVAGE PM7 System Setup Guide (this book)**
  This guide describes an overview of the RIVAGE PM7 system, and explains step by step how to set up the system from connecting devices to producing sound.
  This guide also serves as a user guide for the CSD-R7. It explains part names and panel functions.
- **Manuals for other devices**
  The manuals for other devices describe part names and functions of the corresponding devices.
  These manuals are supplied with the corresponding device packages.
- **RIVAGE PM series Operation Manual**
  The Operation Manual provides detailed explanations of all screens and functions, and includes step-by-step procedures to help you operate the RIVAGE PM series.
- **RIVAGE PM Editor Installation Guide**
  This guide describes how to install the RIVAGE PM Editor.
- **RIVAGE PM StageMix User Guide**
  This guide describes an iPad application that enables you to control the RIVAGE PM series system wirelessly.

  Using the PDF manuals

  These manuals are electronic files in PDF format. You can read this book on a computer. Use Acrobat Reader to read this book on screen, search for words very quickly, print specific pages, or click links to display sections of special interest. The ability to search for words, or to follow links directly to relevant sections in the document, are helpful attributes of this electronic file format. We encourage you to take advantage of these benefits.

  You can download the latest Acrobat Reader application from the website listed below.
  http://www.adobe.com/

All manuals can be downloaded from the Yamaha website. If necessary, you can review updated manual information, which is always posted in the Yamaha website.
https://download.yamaha.com/

About utility software

The RIVAGE PM7 system can be used with a variety of utility software.

- **RIVAGE PM Editor**
  This application software enables you to access the same functions that are available on a digital mixing console. You can use your computer to perform off-line editing by preparing the RIVAGE PM7 system settings in advance, and later, to monitor and adjust those settings (on-line monitoring/operation).
- **RIVAGE PM StageMix**
  StageMix enables you to use your iPad to wirelessly control the parameters of your Yamaha RIVAGE PM series digital mixing console. StageMix offers the sound engineer (who is away from the system) the freedom to control parameters remotely, while listening to the results from the vantage point of the performers.

  Information on these software applications is available on the Yamaha Pro Audio website:
  https://www.yamahaproaudio.com/

  For information regarding how to download or install Editor or StageMix, as well as their various setting details, please refer to the website listed above or to the Installation Guide attached to the downloaded software program.

Firmware updates

You can update the unit firmware to improve operations, add functions, and correct possible malfunctions.

Details on updating the firmware are available on the following Yamaha Pro Audio website:

https://www.yamahaproaudio.com/

For information on updating and setting up the unit, please refer to the firmware update guide available on the website.

Conventions in this manual

In this manual, switch-type controllers on the panel are called “keys.” Control knobs on the panel are called “knobs.” Some knobs rotate from a minimum value to a maximum value, while others rotate endlessly.

Virtual buttons displayed on the screen are called “buttons,” and virtual knobs are called “knobs.”

Controls located on the panel are enclosed in square brackets [ ] (e.g., [CUE] key) to distinguish them from virtual buttons and knobs displayed on screen. For certain controls, the name of the section appears before the brackets (e.g., Selected Channel [ISOLATE] key).

Accessories

- AC Power Cords (×2)
  (The connector shape may vary depending on the sales area.)
- Dust cover
- System Setup Guide (this book)

This product uses a Dante module provided by Audinate Pty. Ltd. You can use Dante Controller to display information about the Dante module used in this product. Visit the Audinate website for more information on the opensource software license applicable to each Dante module.

https://www.audinate.com/software-licensing

System Overview

Introducing the devices

The RIVAGE PM7 system consists of the following components:

Digital mixing console	I/O racks
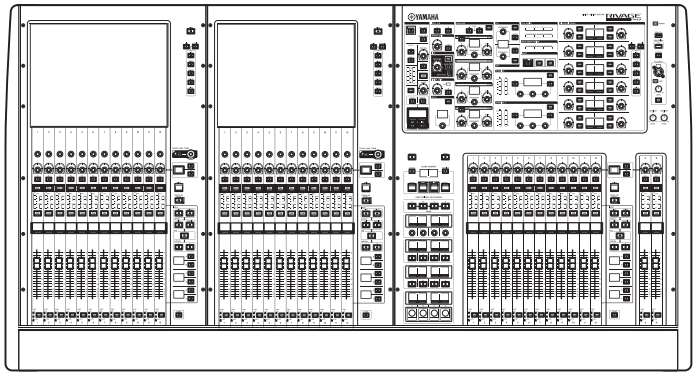	**RPio622** 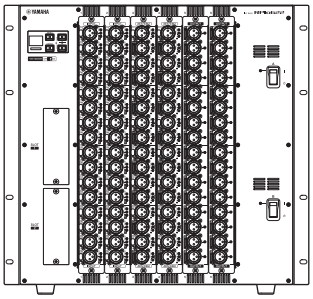 **RPio222** 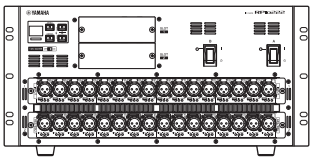
The control surfaces enable you to perform general operations on the RIVAGE PM7 system.	The I/O racks input and output analog and digital audio signals.

RY cards	HY cards
RY16-ML-SILK 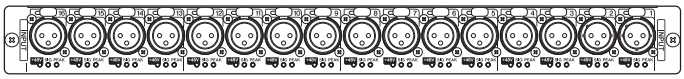 This is a 16-channel mic/line input card. It features SILK digital processing technology that has been co-developed by Rupert Neve Designs and Yamaha. **RY16-DA** 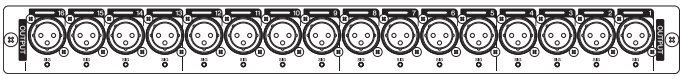 This card features 16-channel analog outputs. **RY16-AE** 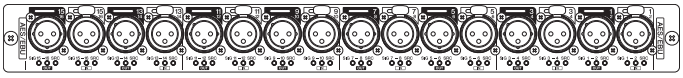 This card features 16-channel digital I/Os that support the AES/EBU format. A sampling rate converter is built in for both inputs and outputs.	**HY256-TL** 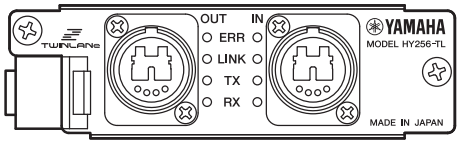 **HY256-TL-SMF** 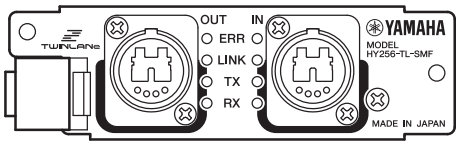 This digital I/O card supports TWINLANe (Yamaha's proprietary audio transfer network protocol). It can handle 256 channels and be installed in the HY card slot. HY256-TL uses multimode fiber optic cables. HY256-TL-SMF uses singlemode fiber optic cables. **HY144-D** 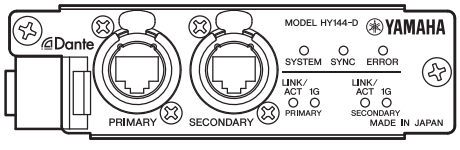 This digital I/O card supports the Dante digital audio network. It can handle 144 channels and be installed in the HY card slot.

NOTE

- Please refer to the owner's manual supplied with the host device for information on installing the I/O cards.
- For detailed information on I/O card settings, refer to the owner's manual for the I/O card.
  For the latest information on which I/O cards can be used with the system, visit the Yamaha Pro Audio website at:
  https://www.yamahaproaudio.com/

TWINLANe network

TWINLANe is Yamaha's proprietary audio transfer network protocol. With this protocol, 400-channel digital audio and control signals can be transfered via a single cable simultaneously.

To connect devices, first install a TWINLANe network card in an HY card slot of each device, then use fiber optic cables to connect the TWINLANe network cards in a ring network topology.

Transferred data	400-channel audio signal and control signal
Sampling frequency	44.1 kHz, 48 kHz, 88.2 kHz, 96 kHz
Network latency*	11 sample@Fs= 44.1 kHz (0.25 msec) 11 sample@Fs= 48 kHz (0.23 msec) 12 sample@Fs= 88.2 kHz (0.14 msec) 12 sample@Fs= 96 kHz (0.13 msec)
Bit-length	32-bit
Topology	Ring

* If the number of connected devices is much larger, or if the total length of all cables is too long, the listed value may not apply.

NOTE

Yamaha recommends that you use opticalCON DUO fiber cable made by Neutrik. In general, fiber optic cables are susceptible to bending or pulling. Use a fiber optic cable that features a strong plastic jacket and lock mechanism to avoid cable-related problems.

About cleaning

If dirt or dust attached to the contact surface of jacks on the fiber optic cables or connectors on the device, data may not be transferred properly. Clean the contact surface of jacks and connectors regularly using a commercially-available fiber optic cleaning tool.

Ring connection

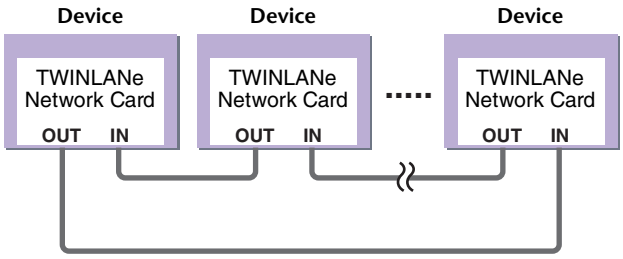

A TWINLANe network uses a ring topology, which provides redundancy in case of broken cables. If a cable in the network breaks down for some reason, the signal will be automatically re-routed and audio will flow without interruption. Even if a device in the network malfunctions, other working devices will be able to continue communicating.

■ **Normal situation**

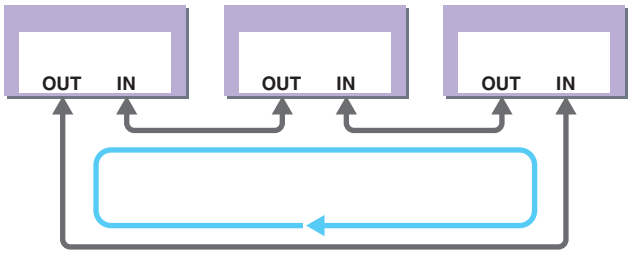

■ **When a cable is broken**

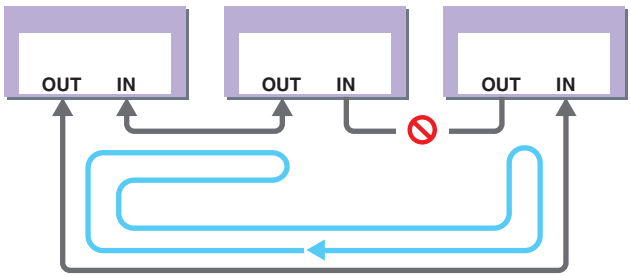

Even if a cable is severed at one point, the signal will be re-routed automatically and communication will continue without interruption.

About network card

The RIVAGE PM7 system uses a TWINLANe network card to configure the I/O network.

TWINLANe network card	HY256-TL	HY256-TL-SMF
Connection cable	Multimode fiber optic cable	Singlemode fiber optic cable
Maximum cable length between devices	Max. 300m	Max. 2km*
Maximum number of channels	256-in/256-out	

* Total cable length for the ring connection using TWINLANe cards can span up to 6 kilometers.

About Dante

Dante is a network audio protocol developed by the Audinate. Within a Giga-bit Ethernet (GbE), Dante delivers multi-channel audio signals at various sampling frequencies and bit rates, as well as device control signals.

Visit the Audinate website for more details on Dante.

http://www.audinate.com/

More information on Dante is also posted on the Yamaha Pro Audio website:

https://www.yamahaproaudio.com/

Caution when using a network switch

Please do not use the EEE function (*) of network switches in a Dante network.

Although power management should be negotiated automatically in switches that support EEE, some switches do not perform the negotiation properly.

This may cause EEE to be enabled in Dante networks when it is not appropriate, resulting in poor synchronization performance and occasional dropouts.

Therefore we strongly recommend the following:

- When using a managed switch, turn off the EEE function of all ports used by Dante. Do not use a switch that is unable to turn off the EEE function.
- If using an unmanaged switch, do not use a switch that supports the EEE function. Such switches are unable to turn off the EEE function.

* EEE (Energy Efficient Ethernet) is a technology that reduces switch power consumption during periods of low network traffic. It is also known as Green Ethernet or IEEE802.3az.

About Connections

There are two ways to connect the Rio to a Dante network. Please refer to the Operation Manual and other related documents for more information on how to set up and and connect your Dante-enabled devices.

NOTE

A daisy chain connection is suitable for a simple system with a small number of devices.

Use a star network if a large number of devices are connected.

Daisy Chain Network

A daisy chain is a wiring scheme in which multiple devices are connected together in sequence. In this way, networking is simple and requires no network switches.

If you connect a large number of devices, you must set a higher latency value to avoid skipping audio that could be caused by an increased delay in signal transfer among the devices. Also, if a connection is broken in a daisy chain network, the signal flow is interrupted at that point and no signal will be transferred beyond that point.

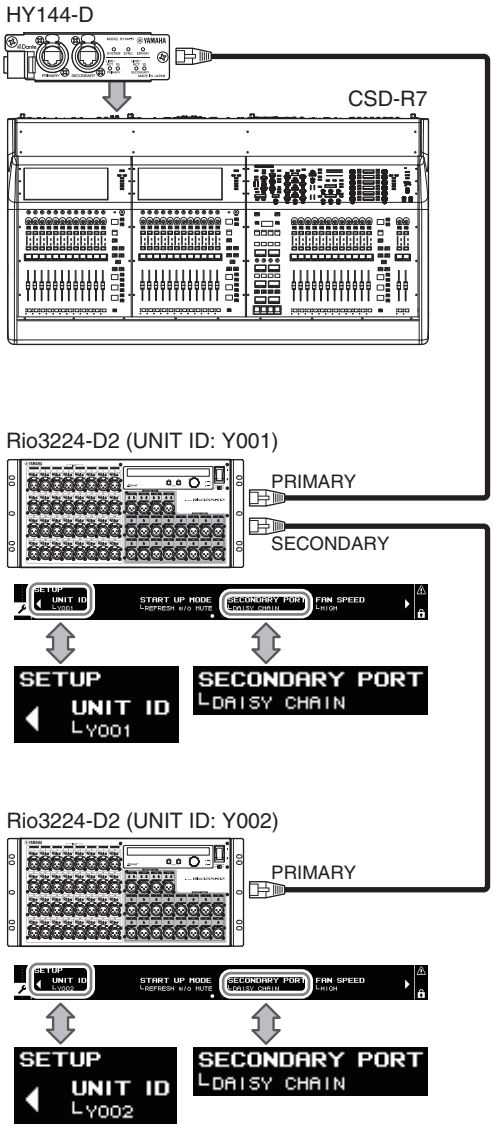

Star Network

In a star network, each device is connected to a central network switch. Using a GbE-compatible network switch enables you to configure a wide-band, large-scale network. We recommend a network switch that features various functions to control and monitor the network (such as Qos, the ability to assign priority to data flows - e.g., clock synchronization or audio transmission on certain data circuits.)

With this topology, it is common to configure a redundant network so that an unexpected network problem will not affect any audio or otherwise stable communications.

About Redundant Networks

A redundant network consists of two circuits, a primary circuit and a secondary circuit. Normally, the network operates on the primary circuit. However, if the primary connection is broken, the secondary circuit will automatically take over communications. Therefore, using a redundant network with a star topology would increase communication stability relative to a daisy chain network.

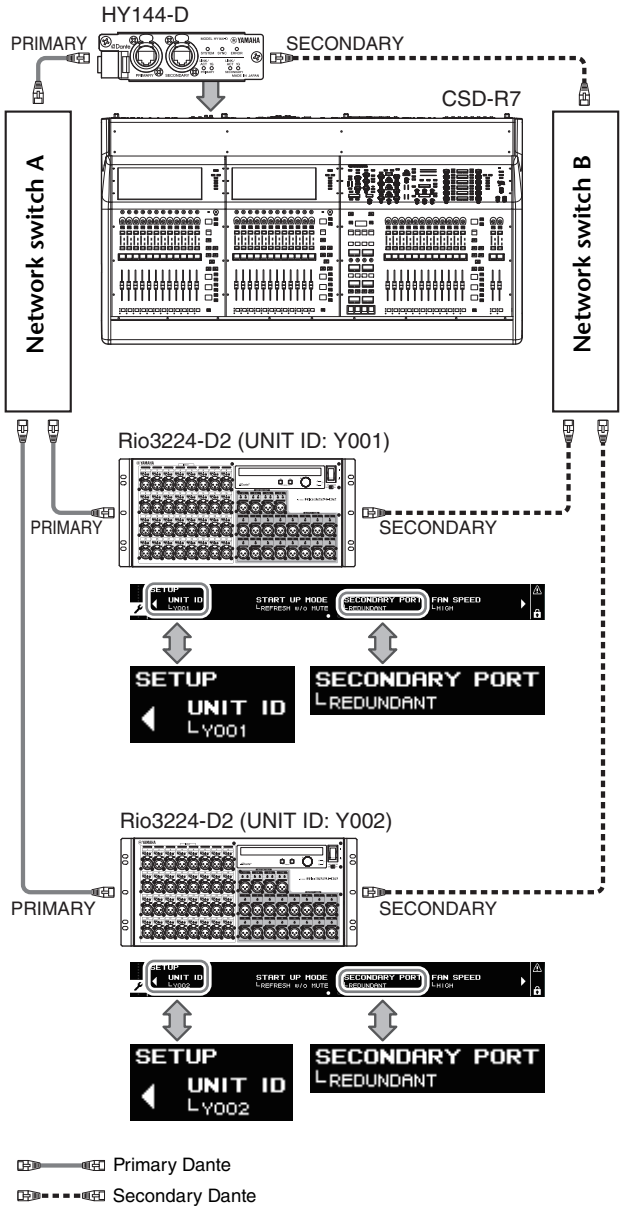

NOTE

If you have been using an HY144-D card on RIVAGE PM10 V1.51 or earlier, you must update the firmware for the HY144-D.

Details on updating the firmware are available on the following Yamaha Pro Audio website:

https://www.yamahaproaudio.com/

Part Names & Functions

Top panel

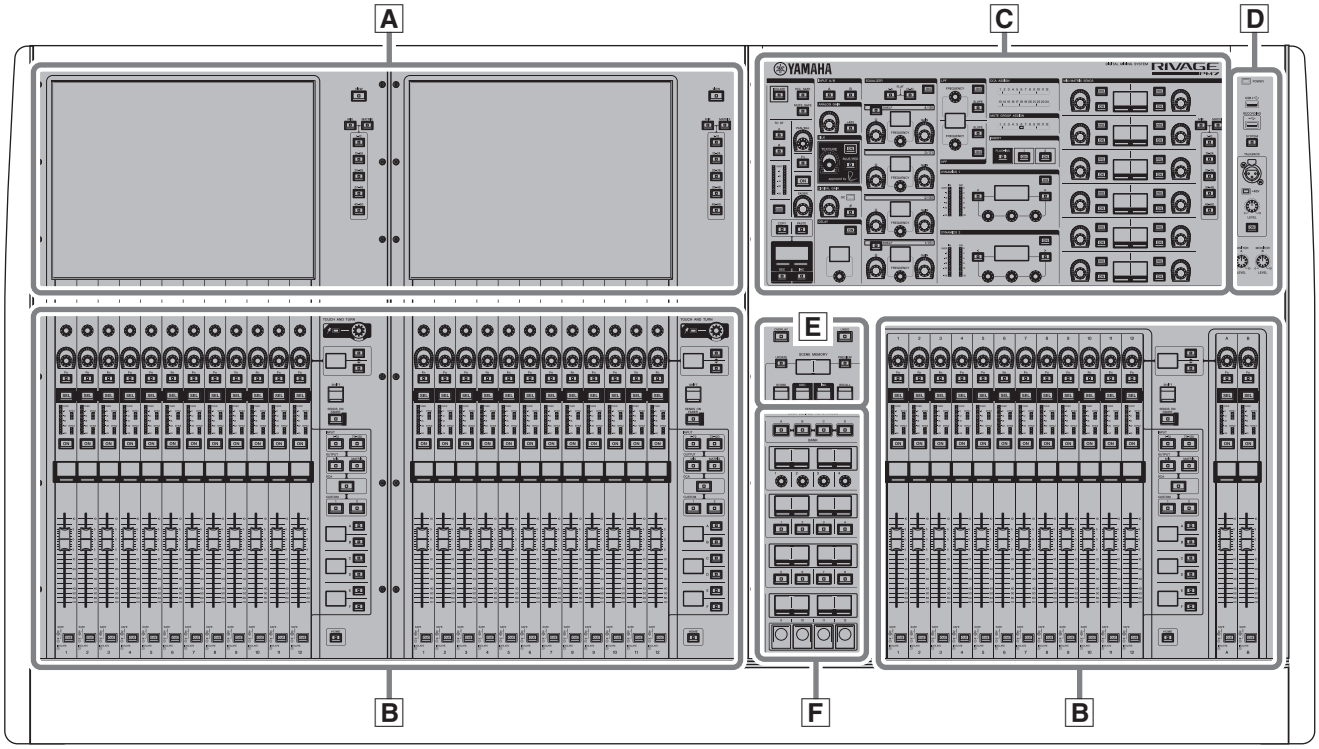

A Touch Screen section ➔ page 22

B Channel Strip section ➔ page 23

C Selected Channel section ➔ page 15

D UTILITY section ➔ page 19

E SCENE MEMORY section ➔ page 20

F USER DEFINED KEYS/KNOBS section ➔ page 21

Selected Channel section

This section enables you to adjust parameters for the selected channel.

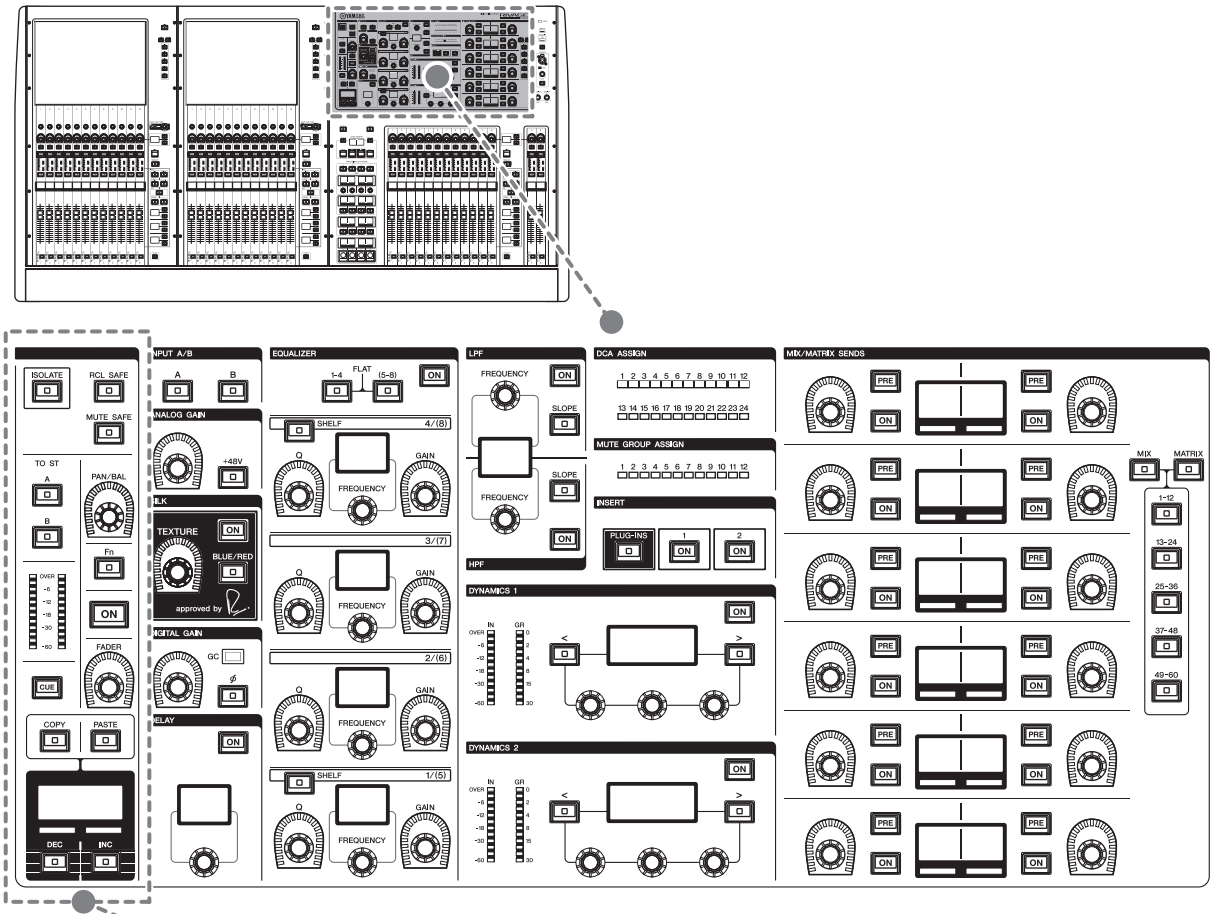

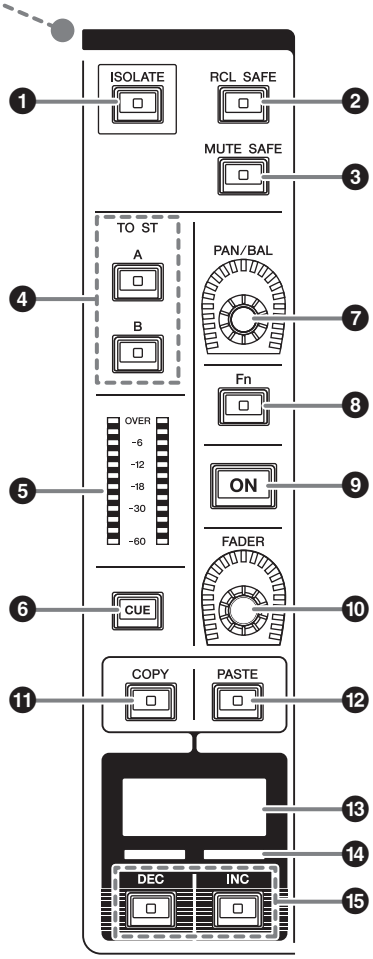

❶ [ISOLATE] key
Switches Isolate on or off. The Isolate function enables you to protect the channel from any recall operations for scenes or libraries. Also, if the "isolated" channel belongs to any DCA, Mute group, or other category, the channel will be unaffected by the controls of that group.

❷ [RCL SAFE] key
Switches Recall Safe on or off.

The Recall Safe function protects certain parameters of a channel from scene recall operations.

❸ [MUTE SAFE] key
Switches Mute Safe on or off.

The Mute Safe function protects a channel from mute operations.

❹ TO ST [A]/[B] keys
Switch on or off the signal sent from the input channel to stereo bus A or B.

❺ Meter LEDs
Displays the channel signal level.

❻ [CUE] key
Switches channel cue send on or off.

❼ **[PAN/BAL] knob**
Sets the panning/balance of the signal sent to the stereo buses.

❽ **[Fn] (Function) key**
Executes the pre-assigned function.

❾ **[ON] key**
Switches the channel on or off.

❿ **[FADER] knob**
Adjusts the channel fader level.

⓫ **[COPY] key**
Copies a channel parameter.

⓬ **[PASTE] key**
Pastes the copied channel parameter.

⓭ **Channel name display**
Indicates the channel number and name, fader value, etc.

⓮ **Channel color indicator**
Indicates the channel color.

⓯ **[INC]/[DEC] keys**
Switch channels to edit parameters.

INPUT/A.GAIN/SILK/D.GAIN/DELAY

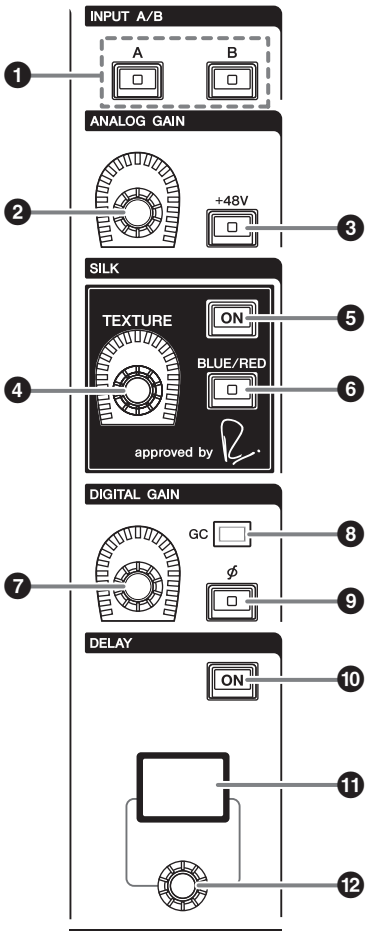

❶ **INPUT [A]/[B] keys**
Switch the input source for the selected input channel.

❷ **[ANALOG GAIN] knob**
Sets the analog gain for the head amp.

❸ **[+48V] key**
Switches phantom power (+48V) on or off.

❹ **SILK [TEXTURE] knob**
Adjusts the intensity of SILK processing.

❺ **SILK [ON] key**
Switches SILK on or off.
SILK processing can be applied only to specific channels to bring the corresponding parts to life within the mix, or to all channels to add depth and perspective to the mix overall.

❻ **SILK [BLUE/RED] key**
Toggles between BLUE and RED: "BLUE" for solidity and power, and "RED" for sparkling energy.

❼ **[DIGITAL GAIN] knob**
Sets the digital gain of the channel.

❽ **GC indicator**
Lights up when GC (GAIN COMPENSATION) is enabled.

❾ **[ø] (Phase) key**
Reverses the phase of the input signal.

❿ **DELAY [ON] key**
Switches Delay on or off.

⓫ **DELAY display**
Indicates the delay value.

⓬ **[DELAY] knob**
Sets the delay value.

EQUALIZER

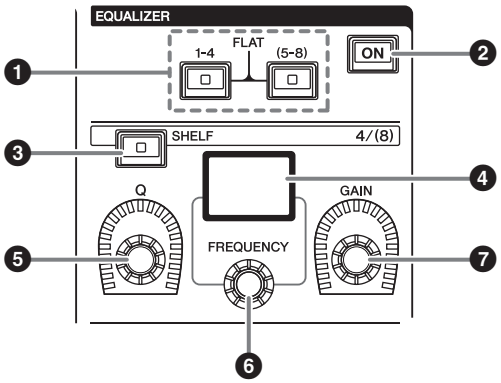

❶ EQUALIZER [1-4]/[(5-8)] keys
Switch the EQ bands for which you want to make settings.

Pressing both [1-4] and [5-8] keys simultaneously will set the gain for all bands to 0 (FLAT).

❷ EQUALIZER [ON] key
Switches EQ on or off.

❸ EQUALIZER [SHELF] key
Switches peaking filter to shelving filter.

❹ EQUALIZER display
Indicates parameters for each EQ band.

❺ EQUALIZER [Q] knob
Specifies the Q value.

❻ EQUALIZER [FREQUENCY] knob
Sets the frequency.

❼ EQUALIZER [GAIN] knob
Sets the gain.

LPF/HPF

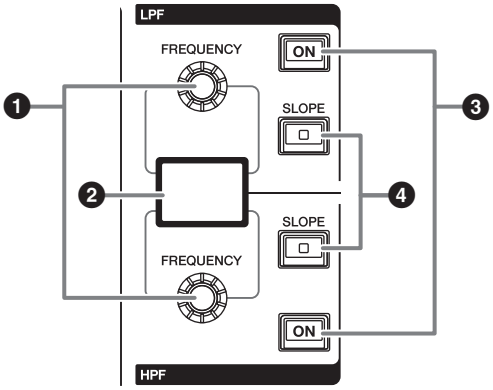

❶ LPF/HPF [FREQUENCY] knobs
Specify the cutoff frequency of LPF and HPF respectively.

❷ LPF/HPF display
Indicates the LPF and HPF settings.

❸ LPF/HPF [ON] keys
Switch the LPF and HPF on or off respectively.

❹ LPF/HPF [SLOPE] keys
Switch the LPF and HPF slope settings respectively.

DCA/MUTE/INSERT

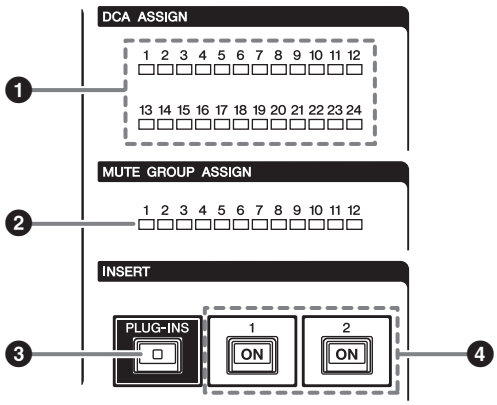

❶ DCA ASSIGN LEDs
Indicate the assigned DCAs.

❷ MUTE GROUP ASSIGN LEDs
Indicate the assigned Mute Groups.

❸ INSERT [PLUG-INS] key
Enables you to recall a parameter setting screen for the inserted plug-ins.

❹ INSERT 1/2 [ON] keys
Switch the INSERT1 and INSERT2 on or off respectively.

DYNAMICS

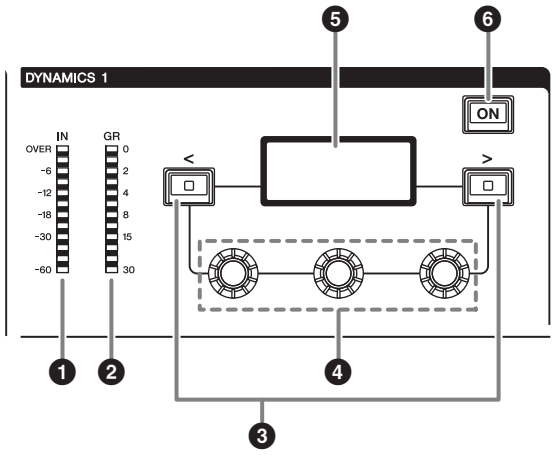

❶ DYNAMICS 1/2 IN LEDs
Indicates the Dynamics input level.

❷ DYNAMICS 1/2 GR LEDs
Indicates the amount of Dynamics gain reduction.

❸ DYNAMICS 1/2 [<]/[>] keys
Switch parameters that are indicated on the DYNAMICS display.

❹ DYNAMICS 1/2 setting knobs
Set parameters that are indicated on the DYNAMICS display.

❺ DYNAMICS 1/2 display
Indicates the Dynamics parameters.

❻ DYNAMICS 1/2 [ON] key
Switches Dynamics on or off.

MIX/MATRIX SENDS

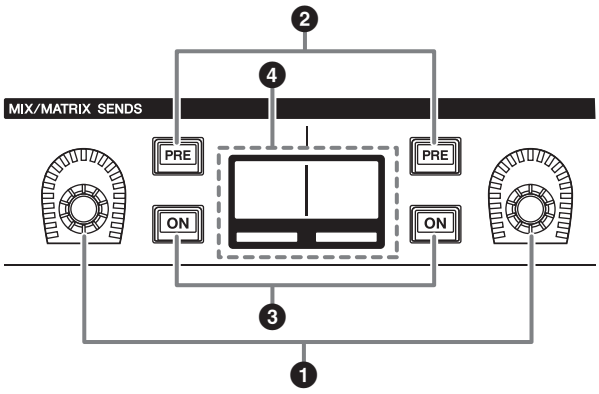

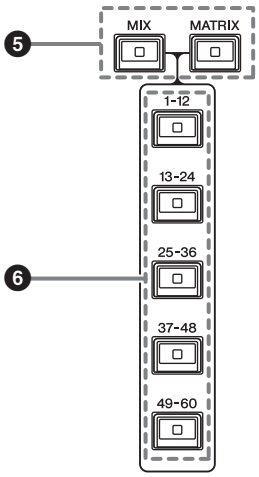

❶ MIX/MATRIX knobs
Adjust the send levels for the corresponding buses.

❷ MIX/MATRIX SENDS [PRE] keys
Toggle the send point between PRE and POST. If a key lights up, the send point is set to PRE.

❸ MIX/MATRIX SENDS [ON] keys
Switch the send signal to the corresponding bus on or off.

❹ MIX/MATRIX SENDS display
Indicates the corresponding bus.

❺ MIX/MATRIX SENDS [MIX]/[MATRIX] keys
Switch the type of the send destination bus.

❻ MIX/MATRIX SENDS [1-12]/[13-24]/[25-36]/[37-48]/[49-60] keys
Selects a bank for the send destination bus.

UTILITY section

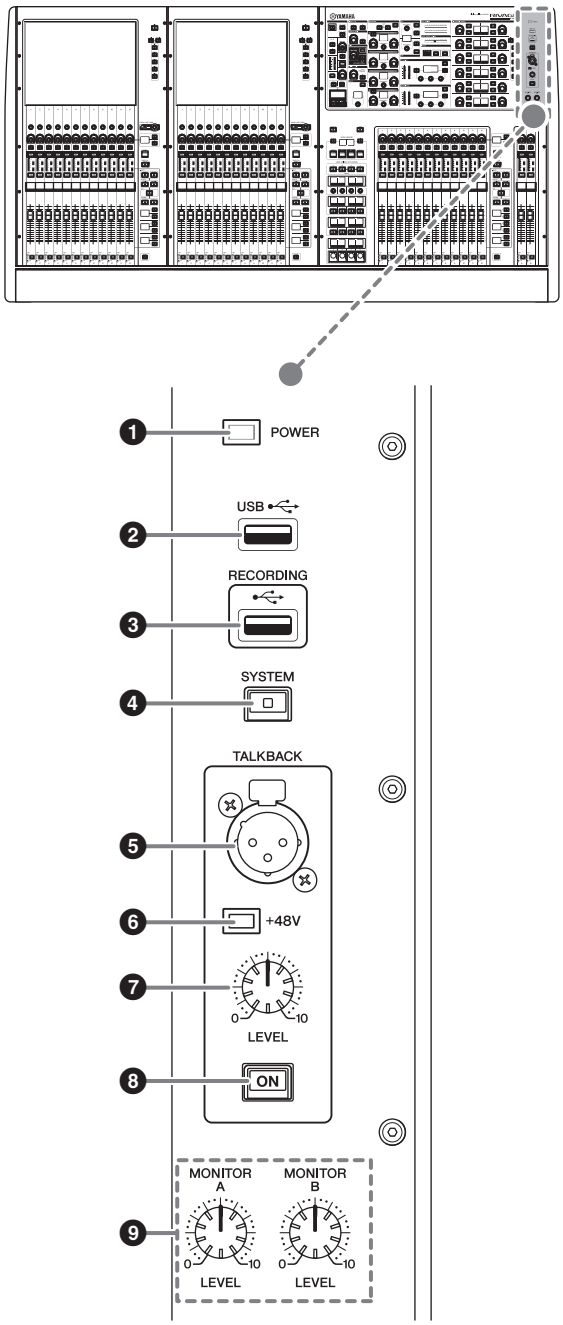

❶ POWER Indicator

Lights when AC power to the unit is ON. If both power switches A and B are turned on, this indicator will light green. If either power switch A or B is turned on, it will light red. If the RIVAGE PM7 system is not started, it will light orange.

❷ USB port

Enables you to connect a USB device (such as a mouse, keyboard, or USB flash drive). Use a USB flash drive to store the system's internal data and to load the stored data into the system.

■ Supported USB flash drive format

The FAT16 and FAT32 formats are supported.

■ Write Protection

Some USB flash drives feature write protection that prevents data from being erased inadvertently.

If your USB flash drive contains important data, we suggest that you use write protection to prevent accidental erasure.

On the other hand, you will need to make sure that your USB flash drive's write-protect setting is turned off before you save data onto the USB flash drive.

For the latest information on which USB flash drives can be used with the system, visit the Yamaha Pro Audio website at:

https://www.yamahaproaudio.com/

NOTICE

Do not remove the USB flash drive from the USB connector or turn off the power to the unit while the unit is accessing data, e.g., saving, loading or deleting data. Doing so may damage your flash drive, or may damage the data in the unit or on your media device.

❸ RECORDING port

Enables you to connect a USB flash drive to record and play back audio files. Supported file formats include WAV and MP3.

For the latest information on what USB flash drives can be used with the system, visit the Yamaha Pro Audio website at:

https://www.yamahaproaudio.com/

❹ [SYSTEM] key

Press this key to display information about the RIVAGE PM7 system on the touch screens.

Press and hold down the key for two seconds or longer to shut down the control section of the console (➔ page 29). Be sure to shut down before turning off the power to the unit.

❺ TALKBACK jack

This is a balanced XLR-3-31 jack to which a talkback mic can be connected.

❻ +48V indicator

Lights up when +48V phantom power is supplied to the TALKBACK jack.

❼ TALKBACK [LEVEL] knob

Adjusts the input level of the mic connected to the TALKBACK jack.

❽ TALKBACK [ON] key

Switches the Talkback function on or off.

❾ MONITOR A/B [LEVEL] knobs

Adjust the output level of the monitoring signals.

SCENE MEMORY section

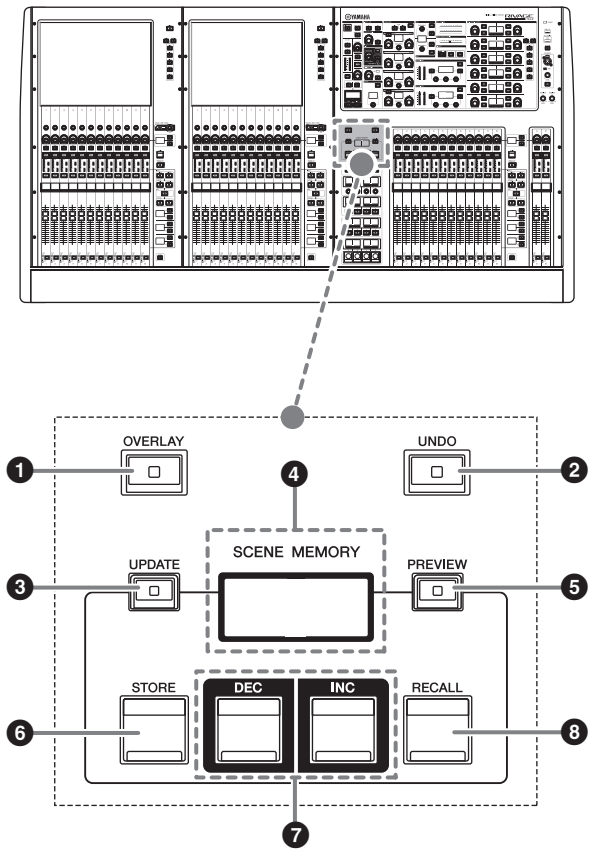

❶ [OVERLAY] key

Press this button to display the OVERLAY SETTING screen.

While pressing and holding down the [SHIFT] key, press the [OVERLAY] key to switch Overlay on or off.

While Overlay is turned on, press and hold down the [OVERLAY] key to enter Overlay edit mode.

❷ [UNDO] key

Cancels the most recent scene operation of storing, recalling or updating a scene.

After you cancel the operation by pressing the [UNDO] key, you can "redo" the canceled operation by pressing the [UNDO] key again.

NOTE

You cannot undo an operation to store a new scene.

❸ [UPDATE] key

Updates scene data by overwriting the current scene (that has been recalled most recently) with the current mix data.

❹ SCENE MEMORY display

Indicates the selected scene memory.

❺ [PREVIEW] key

Switches Preview mode on or off.

❻ [STORE] key

Stores the current scene settings to the selected scene memory. If you select the existing scene, it will be overwritten.

❼ [INC]/[DEC] keys

Enable you to select the scene number of a scene that you want to store or recall.

❽ [RECALL] key

Enables you to recall a stored scene from scene memory.

USER DEFINED KEYS/KNOBS section

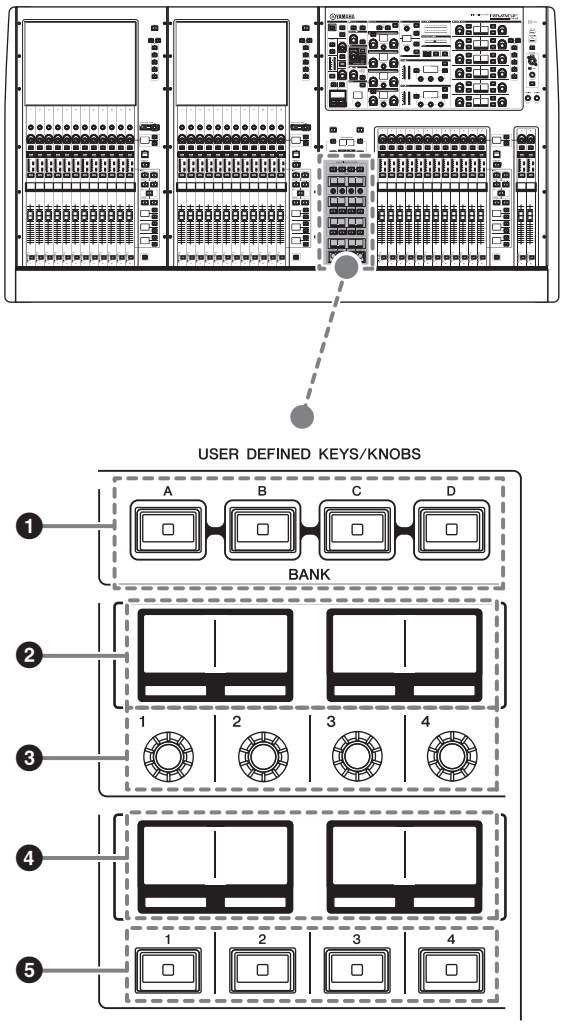

1 USER DEFINED [A]/[B]/[C]/[D] BANK keys
Select the bank ([A], [B], [C], or [D]) for the USER DEFINED knobs or USER DEFINED keys.

2 USER DEFINED KNOBS displays
Indicate the functions assigned to the USER DEFINED knobs.

3 USER DEFINED KNOBS [1]/[2]/[3]/[4]
Control the functions as assigned by the user.

4 USER DEFINED KEYS displays
Indicate the functions assigned to the USER DEFINED keys.

5 USER DEFINED KEYS [1]-[12]
Control the functions as assigned by the user.

Touch Screen section (Bay L, Bay C)

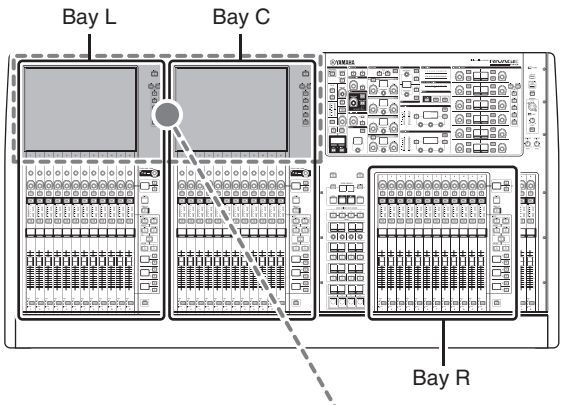

Bay
A "bay" consists of a group of 12 faders located across the Touch Screen section and the Channel Strip section.
The CSD-R7 contains three bays. You can control these bays independently.

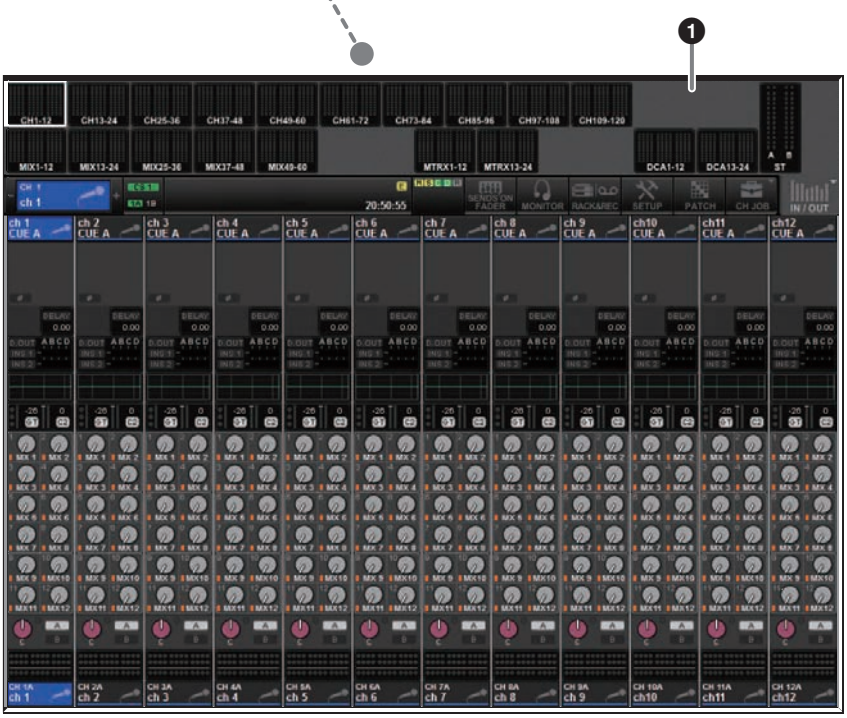

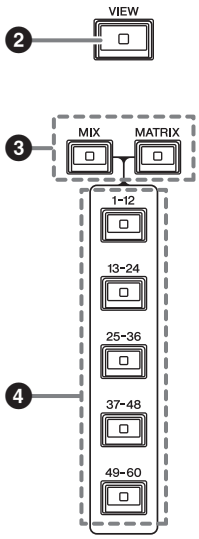

❶ Touch screen
This is a touch screen that you can operate by touching it with your finger to select menus or set parameters. Please note that you cannot operate the unit by touching multiple points simultaneously.

NOTE

- If the touch screens become dirty, wipe them with a soft dry cloth.
- A transparent anti-scratch film is applied to the screens at the factory.

NOTICE

Never use a sharp or pointed object such as your fingernail to operate the touch screens. Doing so may scratch the screens and render the touch screens inoperable.

❷ [VIEW] key
Recalls and toggles between the OVERVIEW and SELECTED CHANNEL VIEW screens.

❸ [MIX]/[MATRIX] keys
Specify the type of the send destination buses displayed on the OVERVIEW screen.

❹ [1-12]/[13-24]/[25-36]/[37-48]/[49-60] keys
Enable you to select a bank for the send destination bus displayed on screen.

Channel Strip section (Bay L, Bay R, Bay C)

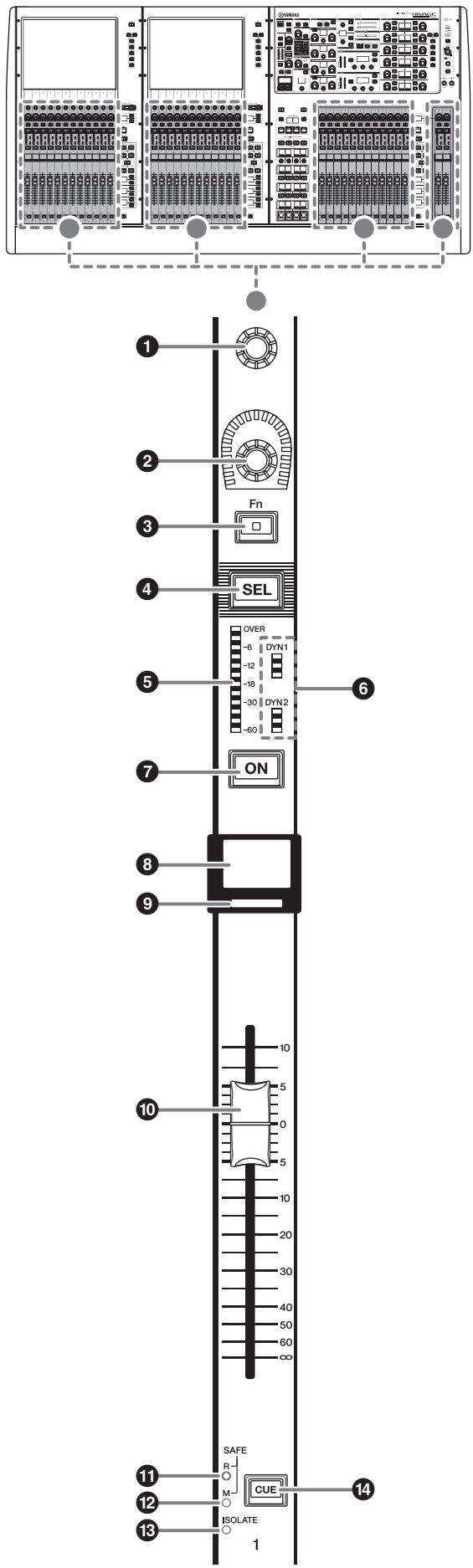

❶ Screen encoder (Bay L and C only)

Controls the knob currently selected on the touch screen. The knob function varies depending on the screen currently displayed.

❷ Channel strip encoder

Adjusts the gain, pan, and the other parameters of the channel. You can assign five parameter functions (selected from the following list) to this encoder, and use the [UP]/[DOWN] keys to select the function.

- PAN/BALANCE
- ANALOG GAIN
- DIGITAL GAIN
- SELECTED SEND
- MIX1 SEND - MIX60 SEND
- MATRIX1 SEND - MATRIX24 SEND
- HPF FREQUENCY
- LPF FREQUENCY
- DYNAMICS1 THRESHOLD
- DYNAMICS2 THRESHOLD
- DELAY
- SILK TEXTURE
- SURROUND L-R PAN
- SURROUND F-R PAN
- SURROUND DIV
- SURROUND LFE

❸ [Fn] key

Executes the function as assigned by the user. You can assign one of the following functions:

- INPUT A/B
- ISOLATE
- ALTERNATE CUE
- ENCODER PARAM
- GC ON/OFF
- SURROUND CUE
- EQ A/B
- DYNAMICS1 A/B
- DYNAMICS2 A/B

❹ [SEL] key

Enables you to select the channel that will be controlled in the Channel Strip section or on the display. When the channel is selected, the key LED will light.

❺ Meter LEDs

Indicate the channel level.

❻ Dynamics LEDs

Indicate the status of Dynamics 1 and 2.

❼ [ON] key
Switches the channel on or off. If the channel is on, the key LED will light. In SENDS ON FADER mode, this key works as an on/off switch for signals sent from each channel to the currently-selected MIX/MATRIX bus.

❽ Channel name display
Indicates the channel name, fader value, etc.

❾ Channel color indicator
Indicates the channel color. You can select the channel color from 11 options including OFF.

❿ Fader
This is a touch-sensitive 100mm motorized fader. In SENDS ON FADER mode, this fader adjusts the send level of the signal sent from each channel to the currently-selected MIX/MATRIX bus.

⓫ SAFE R indicator
Lights if the channel is set to Recall Safe.

⓬ SAFE M indicator
Lights if the channel is set to Mute Safe.

⓭ ISOLATE indicator
Lights if the channel is "Isolated."

⓮ [CUE] key
Selects the channel for cue.

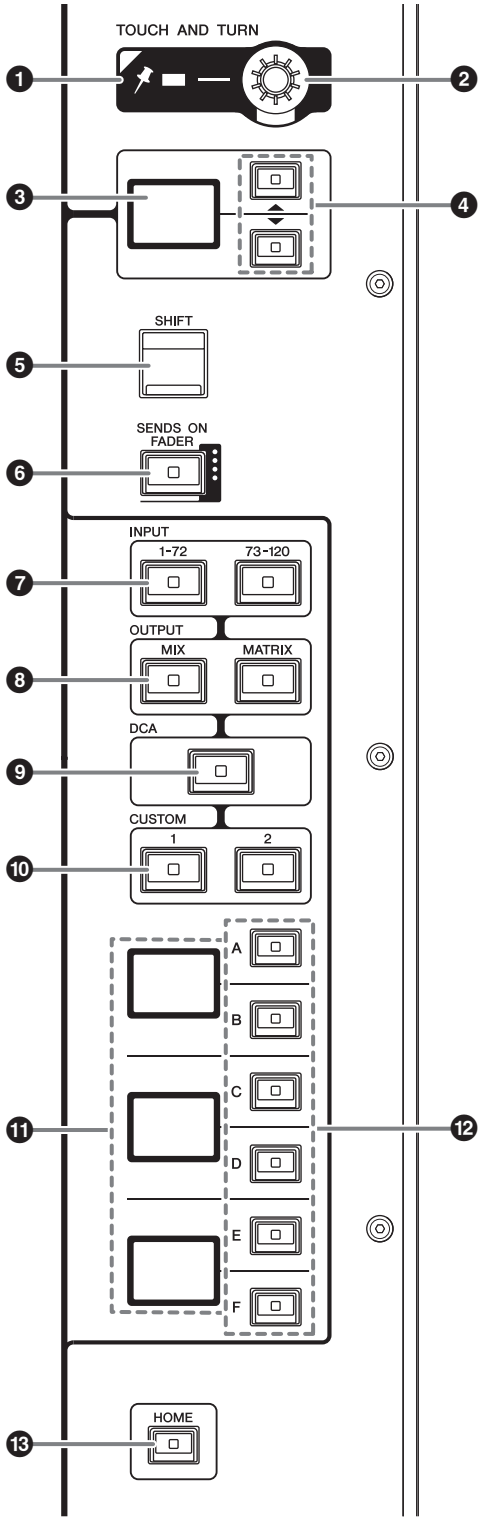

❶ PIN indicator
Lights when the Pinning function for the [TOUCH AND TURN] knob is ON.
(This feature will be supported by a future update.)

❷ [TOUCH AND TURN] knob
Controls the parameter of the knob you are touching on the touch screen.

❸ Channel strip encoder display
Indicates the function that has been assigned to the channel strip encoder.

❹ UP [▲]/DOWN [▼] keys
Enable you to select the function that you want to control using the channel strip encoder.

❺ [SHIFT] key
Combine with another key to perform a certain function.
The following table shows examples of using the [SHIFT] key combined with another key. For more information, please refer to the Operation Manual.

Procedure	Function
Press and hold down the [SHIFT] key and press the [CUE] key, and then release the [SHIFT] key.	To switch cues as the channel's send destination. (A → B → A&B → A)

❻ [SENDS ON FADER] key
Turns SENDS ON FADER mode on and off.

❼ INPUT [1-72]/[73-120] keys
Enable you to select an input layer.

❽ OUTPUT [MIX]/[MATRIX] keys
Enable you to select an output layer.

❾ [DCA] key
Enables you to select a DCA layer.

❿ CUSTOM [1]/[2] keys
Enable you to select a custom layer. You can assign custom faders of two banks (total of 12 layers) to each custom layer.

⓫ Layer display
Indicates the selected layer.

⓬ Layer Select [A]/[B]/[C]/[D]/[E]/[F] keys

Enable you to select a layer. Different layers are recalled to the faders depending on the combination of the keys, as shown in the table below:

Key	[INPUT 1-72]	[INPUT 73-120]	[OUTPUT MIX]	[OUTPUT MATRIX]	[DCA]
[A]	Input 1-12	Input 73-84	MIX 1-12	MATRIX 1-12	DCA 1-12
[B]	Input 13-24	Input 85-96	MIX 13-24	MATRIX 13-24	DCA 13-24
[C]	Input 25-36	Input 97-108	MIX 25-36	–	–
[D]	Input 37-48	Input 109-120	MIX 37-48	STEREO	–
[E]	Input 49-60	–	MIX 49-60	CUE/MONITOR	–
[F]	Input 61-72	–	–	–	–

⓭ [HOME] key

Recalls a group of settings. Press and hold down this key to store the following settings:

- Current screen
- Selected channel/parameter on the screen
- Selected layer

Front panel

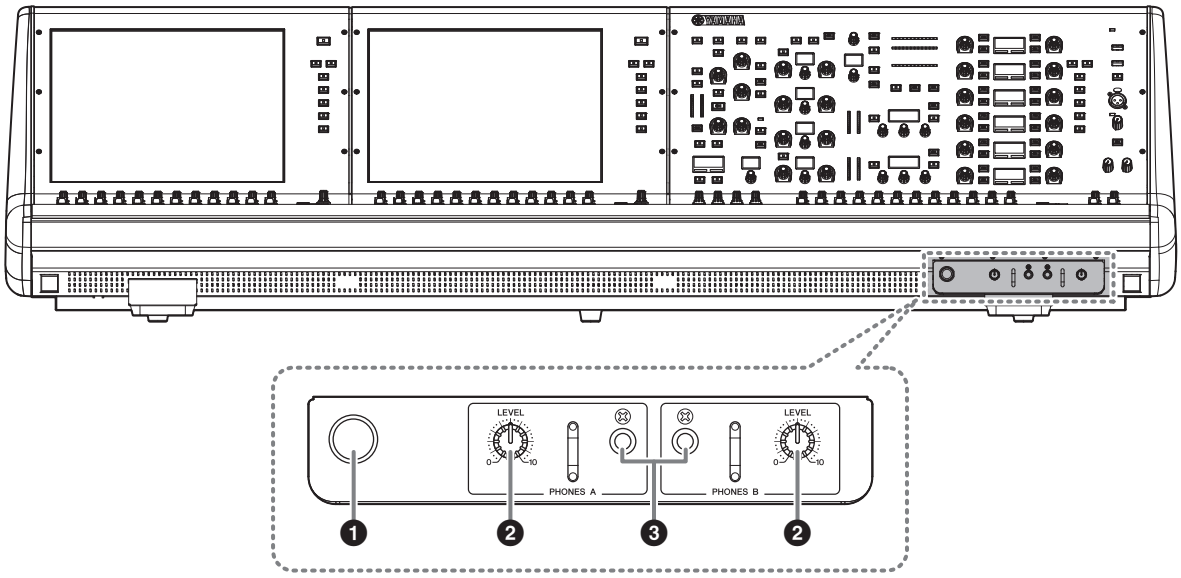

❶ Headphone hanger

To use the hanger, pull out the knob, and then turn it counter-clockwise. (The hanger will be locked in place.)

To put away the hanger, turn the knob clockwise to unlock it, and then push it in.

❷ PHONES A/B [LEVEL] knobs

Adjust the level of the signal output from the PHONES OUT jacks respectively.

❸ PHONES A/B output jacks

These are headphone jacks for monitoring the MONITOR or CUE signal.

Rear panel

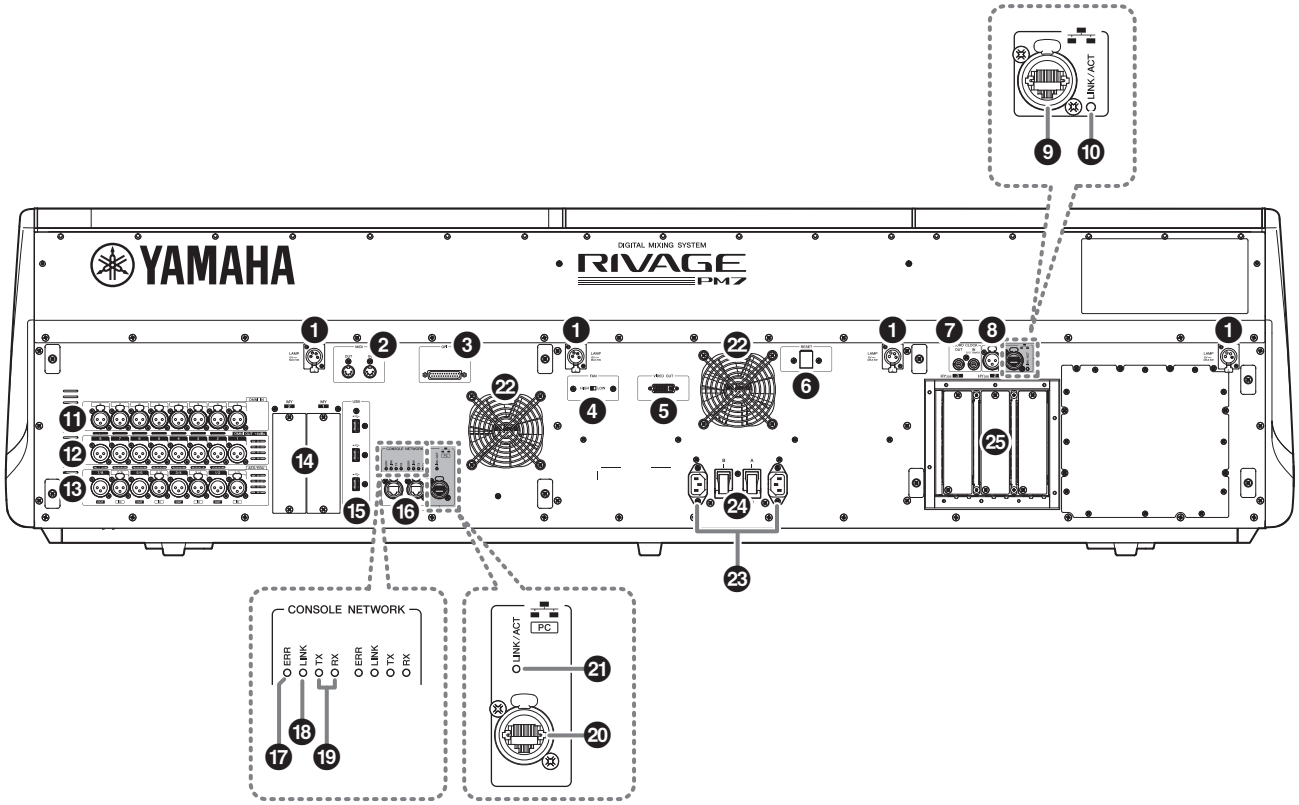

❶ LAMP jacks

These 4-pin female XLR output connectors supply power to the connected lamps. (4 jacks)

❷ MIDI OUT/IN jacks

These connectors are used to transmit and receive MIDI messages to/from external MIDI devices.

❸ GPI connector

This is a D-sub 25-pin female connector that allows communication (8-in, 8-out) with a GPI-equipped external device.

❹ [FAN] switch

Sets the internal cooling fan to operate at either HIGH or LOW speed.

NOTE

This switch is set to LOW when the unit is initially shipped from the factory. As long as the unit is operated within the specified ambient temperature range either the LOW or HIGH setting can be used. The HIGH setting is recommended if the ambient temperature is high, if the unit is in direct sunlight even if the ambient temperature is within the specified operating range, and in any situation in which fan noise is not a problem.

❺ VIDEO OUT connector

Connect your external display monitor to this DVI-D (Dual-link) connector.

❻ [RESET] switch

Resets the digital mixing console.

Only the controls (screens, indicators, and control keys and knobs) on the control surface will restart without interrupting audio. Use this switch in case the digital mixing console becomes non-responsive to your operations.

❼ WORD CLOCK OUT/IN connectors

These are BNC connectors used to transmit/receive word clock signals to/from an external device. The WORD CLOCK IN connector is internally terminated by a 75-ohm resistor.

❽ TC IN connector

This balanced XLR-3-31-type female connector accepts time code signals from a connected external device.

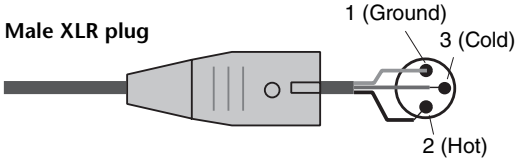

⑨ NETWORK connector

This RJ-45 connector enables you to connect an external device via an Ethernet cable (CAT5 or higher).

NOTE

- Use an STP (Shielded Twisted Pair) cable to prevent electromagnetic interference. Make sure that the metal parts of the plugs are electrically connected to the STP cable's shield by conductive tape or comparable means.
- The use of Ethernet cables with Neutrik etherCON CAT5 compatible RJ-45 plugs is recommended. Standard RJ-45 plugs can also be used.
- Cable length can span up to 100 meters between devices. Maximum practical distance may vary depending on the cable used.

⑩ LINK/ACT indicator

This indicator lights up or flashes green, depending on the connection status.

⑪ OMNI IN jacks

These are balanced XLR-3-31 female input jacks for inputting analog audio signals from line level devices or microphones. They feature SILK digital processing.

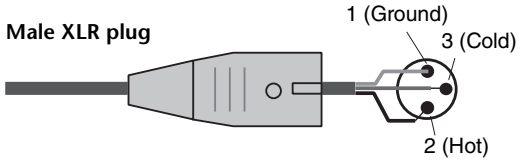

⑫ OMNI OUT jacks

These are balanced XLR-3-32 male output jacks that transmit analog audio signals.

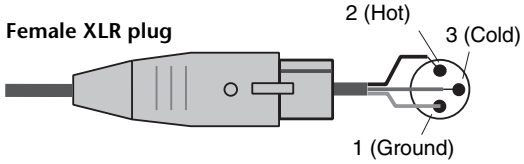

⑬ AES/EBU jacks

Both input and output jacks feature built-in sampling rate converters.

IN

These are balanced XLR-3-31 female input jacks that accept digital audio signals in AES/EBU format.

OUT

These are balanced XLR-3-32 male output jacks for outputting digital audio signals in the AES/EBU format.

⑭ MY card slots

Install optional Mini-YGDAI I/O cards here to expand I/O ports.

⑮ USB ports

Use these ports to connect a USB storage device such as a flash drive, USB mouse, or USB keyboard.

⑯ CONSOLE NETWORK connectors

These RJ-45 connectors allow the unit to be connected to a console network in a ring topology via Ethernet cables (CAT5e or higher recommended).

NOTE

- Use an STP (Shielded Twisted Pair) cable to prevent electromagnetic interference. Make sure that the metal parts of the plugs are electrically connected to the STP cable's shield by conductive tape or comparable means.
- The use of Ethernet cables with Neutrik etherCON CAT5 compatible RJ-45 plugs is recommended. Standard RJ45 plugs can also be used.
- Cable length can span up to 100 meters between devices. Maximum practical distance may vary depending on the cable used.

⑰ ERR indicators

This indicator lights up or flashes red if an error occurs.

In such an event, please contact your Yamaha dealer.

⑱ LINK indicators

This indicator flashes or lights up, depending on the network status.

Green (flashing)	The unit is preparing to connect to the console network. If it continues flashing, the system is not functioning properly. If the problem persists after you take the following actions, please contact your Yamaha dealer. • Turn the power to the RIVAGE PM7 system off and then on. • Make sure that the cables are connected properly. • Make sure that the cables are securely inserted (locked in). • Change to a different cable.
Green (lit steadily)	The unit is connected to the console network properly.

⑲ TX/RX indicators

The appropriate indicator flashes green when data is transmitted from (TX) or received at (RX) the TO ENGINE OUT/IN connectors.

⑳ NETWORK PC connector

This RJ-45 connector allows the unit to be connected to a computer or network device via an Ethernet cable (CAT5e or higher recommended).

NOTE

- Use an STP (Shielded Twisted Pair) cable to prevent electromagnetic interference. Make sure that the metal parts of the plugs are electrically connected to the STP cable's shield by conductive tape or comparable means.
- The use of Ethernet cables with Neutrik etherCON CAT5 compatible RJ-45 plugs is recommended. Standard RJ45 plugs can also be used.
- Cable length can span up to 100 meters between devices. Maximum practical distance may vary depending on the cable used.

㉑ LINK/ACT indicator

This indicator flashes or lights up green, depending on the connection status.

㉒ Vent

The digital mixing console is equipped with cooling fans. These vents let warm air out from the unit. Please make sure that you do not block the vents with any object.

㉓ AC IN connectors

Use these sockets to connect the supplied power cords. First connect the AC power cords to this unit, and then insert the power cord plugs into AC outlets.

Insert the cable plugs all the way until they lock in place securely. The supplied AC power cords feature a V-lock mechanism via a latch, which prevents the power cords from disconnecting accidentally.

Caution

Be sure to turn off the power to the unit before connecting or disconnecting the power cords.

To disconnect each power cord, remove it while pressing the latch on the plug.

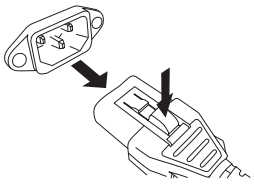

㉔ I/⏻(Power switches)

Toggle between power on (I) and off (⏻).

㉕ HY card slots

Enable you to install optional HY cards and connect to an I/O rack, such as RPio622, to expand I/O ports.

● Shutting down the power to the unit

Before you turn off the power to the digital mixing console, Yamaha recommends that you store the current status to scene memory.

If you change the connection status of the components after the power is turned off, some settings, such as patching, may be altered when you turn the power on again. For more information on storing a scene, please refer to the Operation Manual.

NOTE

If you turn off the power to the digital mixing console without following the shutdown procedure, data inside the built-in storage may be damaged. Be sure to perform the shutdown procedure to turn off the power to the digital mixing console.

1. Press the [SYSTEM] key (➔ page 19 ❹) for two seconds or longer.

A message will ask you to confirm the shutdown operation.

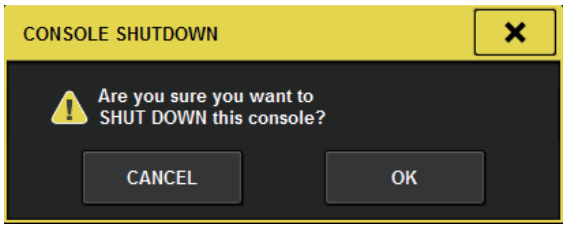

2. To turn the power off, press the OK button. To cancel shutdown, press the CANCEL button.

3. Wait until the LEDs on the panel turn off, the touch screens go dark, and the POWER indicator lights orange.

4. Turn off both power switches A and B on the rear panel.

Caution

If you plan to turn on the power to the control surface again, wait at least five seconds before switching the power on. Otherwise, the unit may malfunction.

Even when the power switches are turned off, a small amount of current still flows through the unit. If you plan not to use the unit for a long period of time, remove the power cords from the AC outlets.

Power Supply

Connecting to power sources

1. **Turn off both power switches A and B on the unit.**
2. **Connect one of the supplied power cords to AC IN connector (A), and the other to AC IN connector (B).**
3. **Connect the other end of each power cord to an AC outlet of a different power source.**

NOTE

- Follow this procedure in reverse order when disconnecting the power cords.
- To disconnect each power cord, remove it while pressing the latch on the plug.

Warning

Use only the supplied AC power cords. Using other cords may lead to overheating or electric shock.

Caution

Be sure to turn off the power to the unit before connecting or disconnecting the power cords.

Installing and Removing Optional Cards

Installing a Mini-YGDAI card

Before you install the card, you must check the Yamaha Pro Audio website to see whether your CSD-R7 supports that card, and to verify the number of other Yamaha cards or third-party cards that can be used in conjunction with this card.

https://www.yamahaproaudio.com/

1. **Make sure that the power is turned off.**

Caution

Installing or removing a card while the power is on may lead to component failure or electric shock.

2. **Loosen the screws that fasten the slot cover, and remove the slot cover.**

Keep the cover and fixing screws in a safe place for future use.

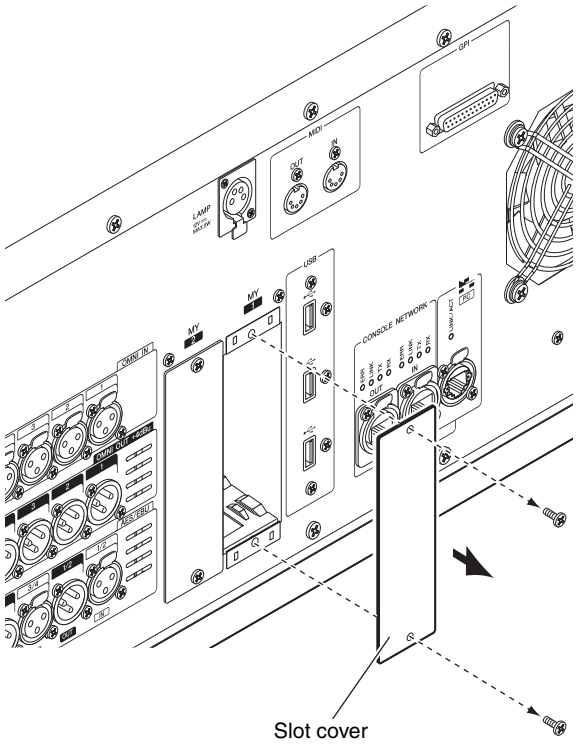

3. Align both edges of the card with the guide rails inside the slot, and then insert the card into the slot.

Push the card all the way into the slot so that the connector at the end of the card is correctly inserted into the connector inside the slot.

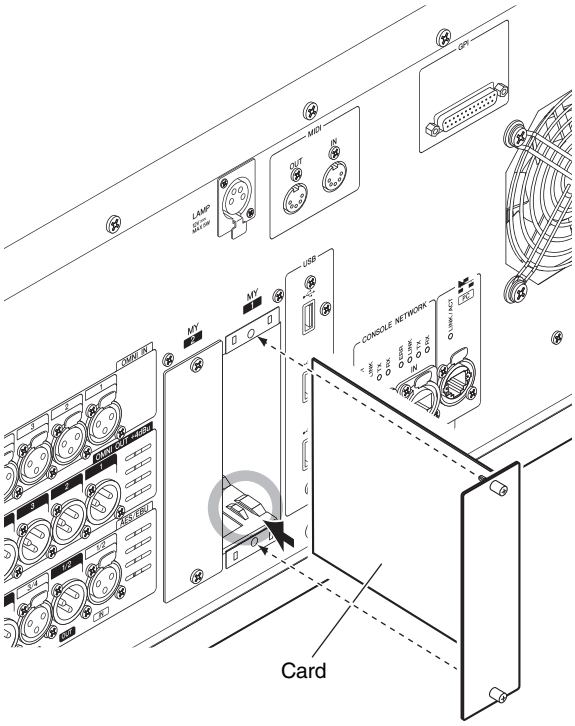

4. Fasten the card using the screws attached to the card.

If the card is not fastened securely, component failure or malfunction may occur.

Removing the Mini-YGDAI card

1. Make sure that the power is turned off.

Caution

Installing or removing a card while the power is on may lead to component failure or electric shock.

2. Completely loosen the screws that hold the card in place.

3. Pull the card toward you while holding the screws on the card.

4. Replace the stored slot cover and affix it with the screws.

Installing an HY card

1. Make sure that the POWER indicator is turned off.

Caution

Installing or removing a card while the power is on may lead to component failure or electric shock.

2. Remove the screws that fasten the slot cover to remove the slot cover.

Keep the cover and fixing screws in a safe place for future use.

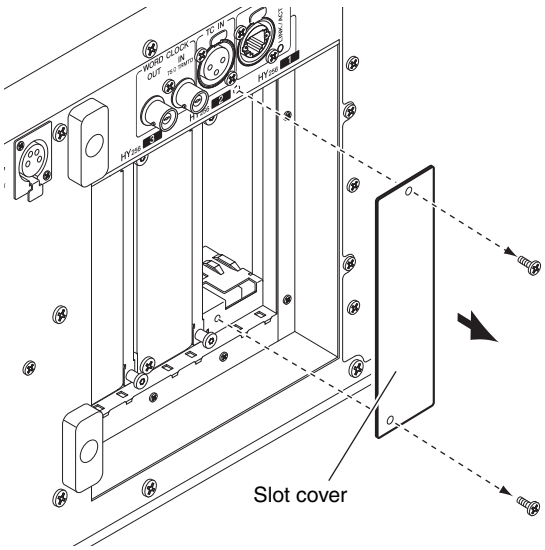

3. Align both edges of the HY card with the guide rails inside the slot, and then insert the card into the slot with the card installation lever pressed down.

NOTE

For information on which cards support each slot, refer to “Introducing the devices” on page 10.

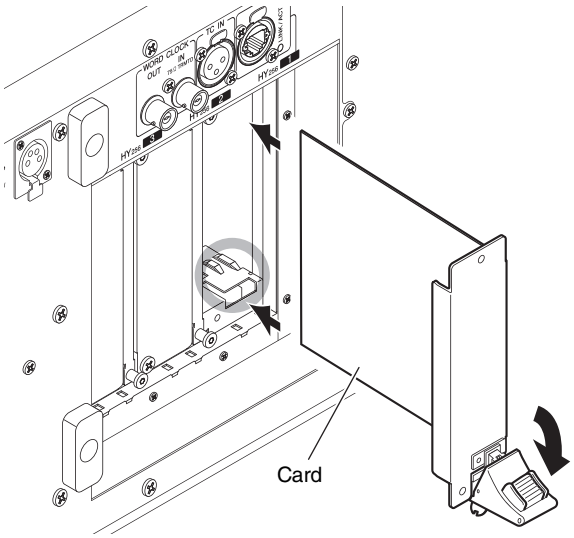

Push the card all the way into the slot so that the connector at the end of the card is correctly inserted into the connector inside the slot.

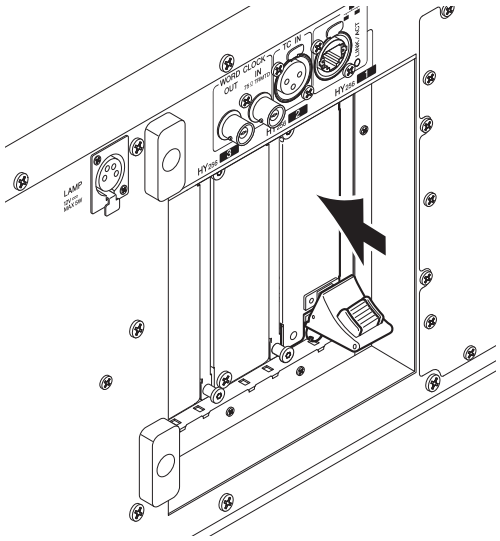

4. Pull up the card installation lever to lock in the card.

Make sure that the lever claw is securely locked under the bottom part of the slot.

NOTE

If the lever claw does not lock in, pull up the card slightly, then push it in.

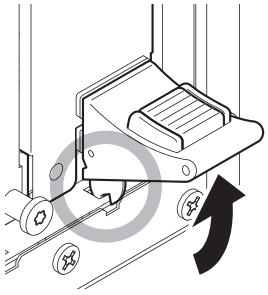

5. Affix the card using the screws that were previously used to affix the slot cover.

If the card is not fastened securely, component failure or malfunction may occur.

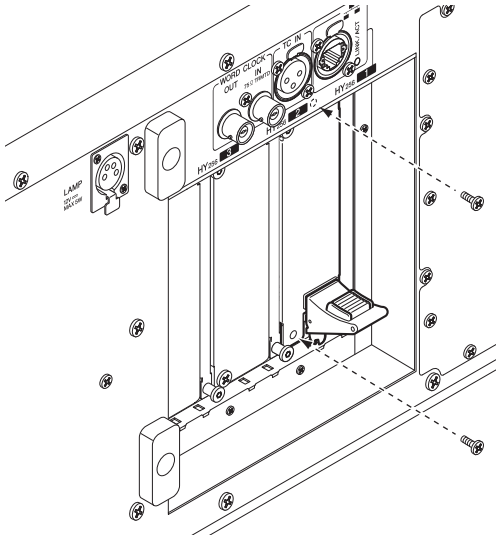

Removing an HY Card

1. Make sure that the power indicator is turned off.

Caution

Installing or removing a card while the power is on may lead to component failure or electric shock.

2. Remove the screws that hold the card in place.

3. Unlock the card by pressing the red button on the card installation lever.

4. Press down the card installation lever to pull out the card.

5. Replace the stored slot cover and affix it using the screws.

Touch Screen

Basic touch screen operations

This section explains the basic procedures you can perform on the unit's touch screens.

Pressing the touch screen

You will use this operation primarily to switch screens and pages, to select the parameter to be operated, and to turn a button on/off. Some buttons enable you to change the value depending on the location you press.

On-screen user interface

This section explains various user interface components shown in the touch screens, and how to use them.

Tabs

Tabs enable you to switch between multiple pages. Each tab indicates its page name.

Buttons

Buttons are used to execute specific functions, to switch parameters on or off, or to select one of multiple choices. Buttons that perform on/off operations appear in solid background colors while they are turned on, and dark while turned off.



Faders/knobs

Faders and knobs on screen move in tandem when you operate the top panel faders and knobs. The current value appears immediately below the fader or knob.

If you press once a knob that can be operated by the [TOUCH AND TURN] knob, a thick frame appears around the knob. This frame indicates that the knob has been selected for operation.

NOTE

Pressing certain knobs a second time while a thick frame is displayed around them will open a window in which you can make additional detailed settings.

List windows

Windows similar to the following enable you to select items from a list, such as a list of [USER DEFINED] keys.

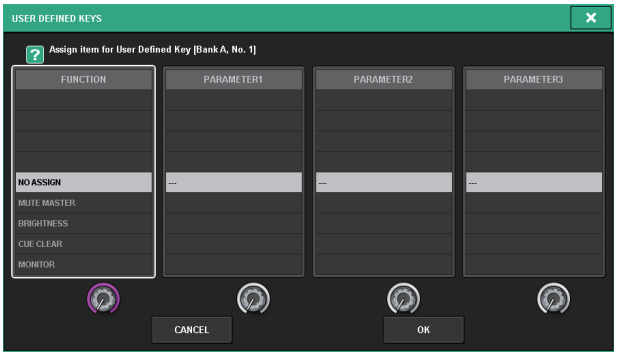

The highlighted item in the middle of the list is the item that is selected for operation. Press the screen encoders located below the list to scroll the list upward or downward.

Keyboard window

The following keyboard window will appear when you need to assign a name or comment to a scene or library, or when you need to assign a channel name. Press characters in the window to enter the desired characters.



Popup windows

When you press a button or field for a specific parameter in a screen, a window showing details or a list for that parameter will appear. These are called “popup windows.”



You can switch between popup windows using tabs as needed. Some popup windows show several buttons called “tool buttons” at the top of the window. You can use these tool buttons to recall libraries or to perform copy and paste operations.

Press the “X” symbol located in the upper right corner to close the popup window and return to the previous screen.

Dialog boxes

A dialog box like the following will appear when you need to confirm the operation you just performed.

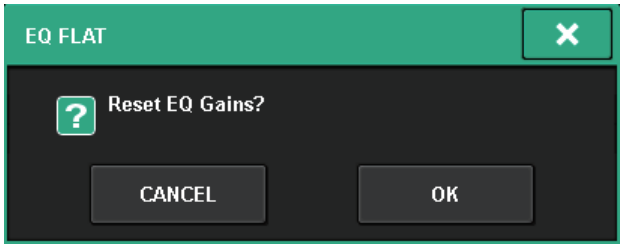

Press the OK button to execute the operation. The operation will be canceled if you press the CANCEL button.

Viewing a touch screen

The following examples describe two types of screens displayed on the touch screens.

■ OVERVIEW screen

This screen shows the main parameters of 12 channels selected as a layer.



■ SELECTED CHANNEL VIEW screen

This screen shows all mix parameters of the currently-selected channel.



Quick Guide

This section describes the basic setup procedure for the RIVAGE PM7 system.

Basic system configuration

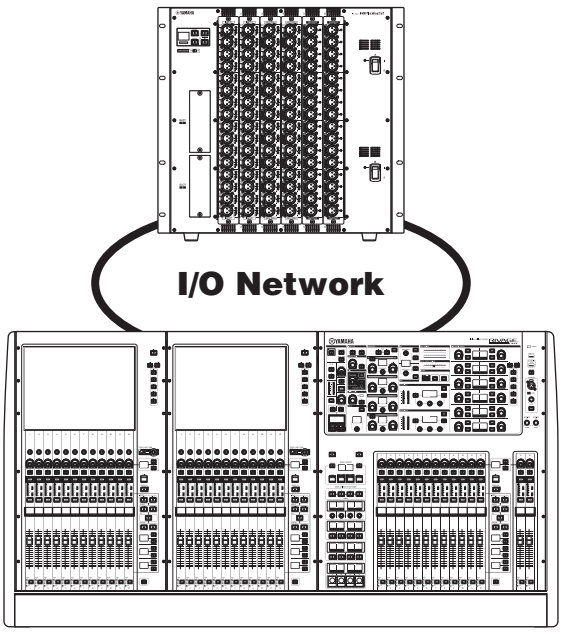

The setup procedure is explained using a system comprised of the following devices:

- Digital mixing console (CSD-R7) ×1
- I/O rack (RPio622) ×1
- HY card (HY256-TL) ×2
- RY card (RY16-ML-SILK) ×1
- RY card (RY16-DA) ×1

Procedure

Installing an optional card
Setting the Unit ID
Connecting the devices
Turning on the power to the RIVAGE PM7 system
Setting the word clock
Assigning channels to the TWINLANe network
Patching the input ports
Patching the output ports
Setting the analog gain for HA (Head Amp)
Sending an input channel signal to the STEREO bus

Installing an optional card

HY card installation

Install a TWINLANe network card into HY card slot 1 on both the digital mixing console and I/O rack. HY card slot 1 is used exclusively for a TWINLANe network card.

RY card installation

Install an RY16-ML-SILK mic/line input card into RY card slot 1 on the I/O rack.

Install an RY16-DA analog output card into RY card slot 2 on the I/O rack.

Installing an RY card

1. Make sure that both power indicators are off.

Caution

Installing or removing a card while the power is on may lead to component failure or electric shock.

2. Remove the screws that fasten the slot cover to remove the slot cover.

Keep the cover and fixing screws in a safe place for future use.

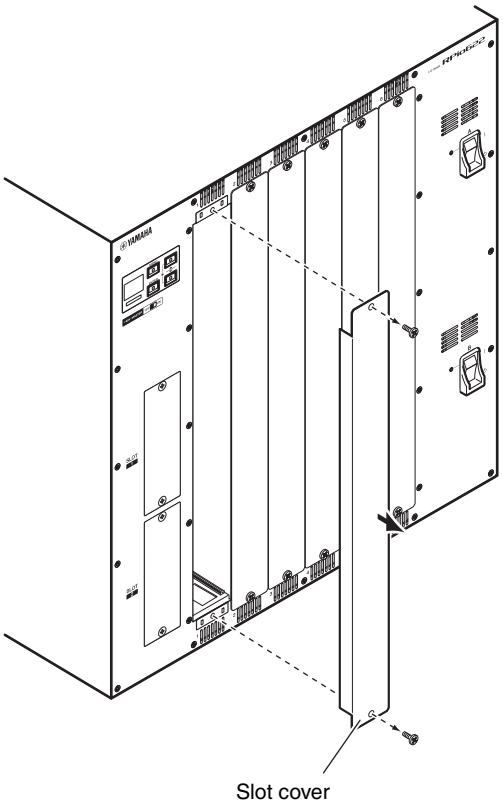

3. Align both edges of the card with the guide rails inside the slot, and then insert the card into the slot.

Push the card all the way into the slot so that the connector at the end of the card is correctly inserted into the connector inside the slot.

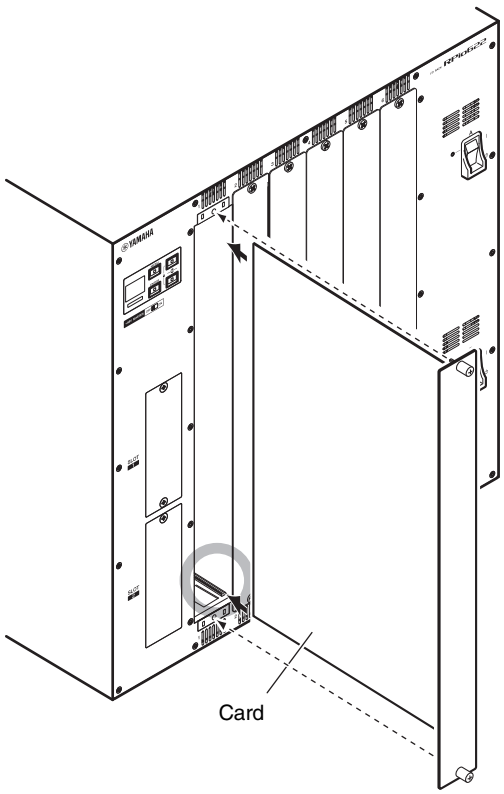

4. Fasten the card using the screws attached to the card.

If the card is not fastened securely, component failure or malfunction may occur.

NOTE

Use a tool, such as a screwdriver, to tighten the screws securely and affix the card.

The unit's card slots are designed so that all cards will be installed without any gap between them to improve shielding quality.

If the screws are tightened incorrectly or insufficiently, the shielding quality will fall short. Also, you might have difficulty in installing additional cards.

Setting the Unit ID

You must set a unique ID for each device connected to the same network so that the system will identify the devices correctly. You can identify the Unit ID for each device on the LCD of the corresponding device.

Setting the Unit ID on the I/O rack

1. Switch on power A and B on the I/O rack for which you want to set the Unit ID.

The Unit ID of the corresponding device will appear on the LCD.

I/O rack: M1-8, S1-8*

* The CSD-R7 will not recognize devices with IDs S1-8. Be sure to use IDs M1-8.



2. Press the [MENU] key.

The menu screen will appear.

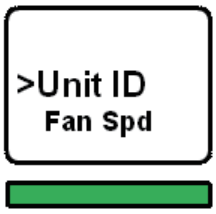

3. Use the [▲]/[▼] keys to move the cursor to Unit ID.

4. Press the [ENTER] key.

The Unit ID setup screen will appear.



5. Use the [▲]/[▼] keys to select a unique Unit ID.

6. Press the [ENTER] key to confirm the Unit ID setting.

If you press the [MENU] key without confirming the Unit ID beforehand, the unit will return to the top screen.

7. **The unit displays "DONE", and automatically restarts.**



8. **Perform the same procedure for other devices.**

Be sure to assign a unique Unit ID to each device.

9. **When the setting is complete, turn off the power to the devices.**

Connecting the devices

Make sure that power indicators are off.

Connecting the digital mixing console and I/O rack

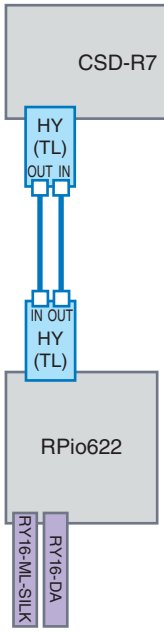

Use fiber optic cables to connect the TWINLANe IN/OUT connectors on the HY card installed on the digital mixing console to the TWINLANe IN/OUT connectors on the HY card installed on the I/O rack.

Audio I/O connections

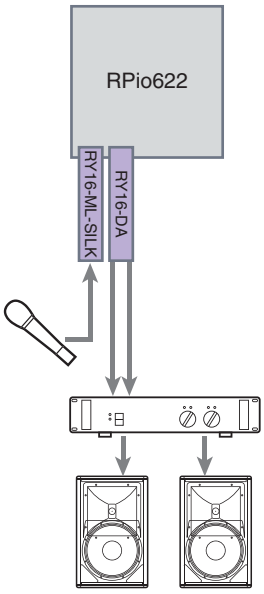

1 Analog input connections

Connect a microphone and/or line level devices to the input jacks on the RY card (RY16-ML-SILK).

NOTE

In the default state, the input jacks are not patched to input ports. To use the signals connected here as inputs, you will need to make patch settings. (➔ page 40)

2 Analog output connections

Connect a speaker system to the output jacks on the RY card (RY16-DA). You can patch output channel signals (MIX, MATRIX, STEREO), monitoring signal, or cue signal to these jacks.

Digital input/output connections

In order to connect a digital audio device, you must first install an optional card on the I/O rack. You can also use the AES/EBU jacks on the digital mixing console to connect digital audio devices.

Turning on the power to the RIVAGE PM7 system

After you have set Unit IDs and made connections, turn on the power to all devices.

Once the digital mixing console starts, information on the connected devices will automatically be collected and all devices will synchronize. A popup screen will appear. Select the data sync direction and press the SYNC button.



Setting the word clock

The entire system must synchronize to the same word clock.

1. Press the WORD CLOCK button in the SETUP screen.



2. Select a clock source.



The initial value is 96 kHz.

If the unit is operating properly with the selected word clock, the indicator above the corresponding button will turn light blue, and the upper-left corner of the MASTER CLOCK SELECT field will indicate the clock rate.

3. To close the WORD CLOCK popup window, press the "x" symbol located in the upper right.

The system will return to the SETUP screen.

Assigning channels to the TWINLANe network

On the DSP and I/O rack, you can select channels to be output to the TWINLANe network, and make settings to reserve certain bandwidth on the network.

1. Press the SYSTEM CONFIG button in the SETUP screen.



2. Press the DSP button on the HY SLOT1 tab.



The DSP popup window will appear.

3. Press the Channel assign popup button.

For this example, select STEREO.

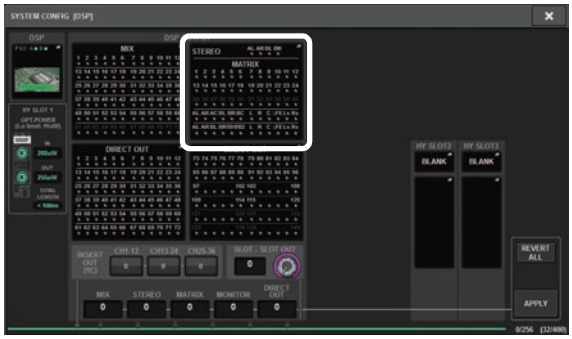

The TWINLANe CONFIGURATION popup window will appear.

4. Press the channel select buttons to turn them on.

For this example, select STA L and STA R.



Channel select button

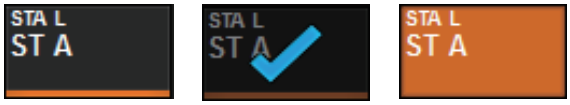

Unselected | Currently selected | Already selected

5. To close the TWINLANe CONFIGURATION popup window, press the CLOSE button.

The system will return to the DSP popup window.

6. If you changed the channel assignments, press the APPLY button.

The setting will be applied to the output from the DSP to the TWINLANe network.

7. When a confirmation dialog appears, press the OK button.

8. To close the DSP setting screen, press the "x" symbol located in the upper right.

The system will return to the SYSTEM CONFIG popup window.

9. Select the I/O rack.

Press the I/O rack select button (in this example, the M1 button).

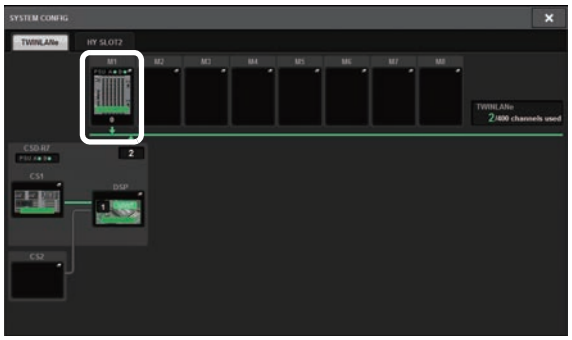

The I/O rack settings popup window will appear.

10. Press the Channel assign popup button.

For this example, select RY card slot 1.

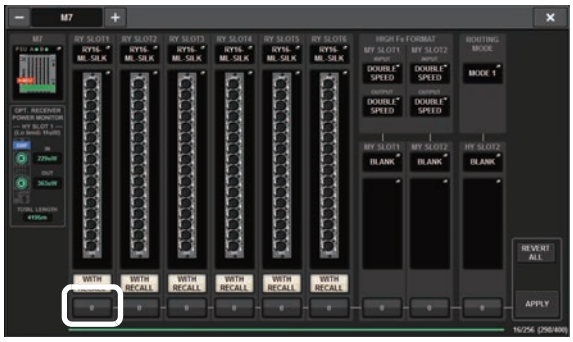

11. Press the APPLY button.

The setting will be applied to the output from the I/O rack to the TWINLANe network.

12. When a confirmation dialog appears, press the OK button.

Patching the input ports

This section explains how to patch an input channel to the input jack to which a microphone was connected in the "Connecting the devices" section.

NOTE

The PATCH screen displays the input/output jacks assigned to the TWINLANe network.

1. Press the PATCH button on the menu bar in the touch screen.

The PATCH screen will appear.

2. Press the INPUT tab.



3. Use the knob in the upper-right corner to display the desired input jacks.



NOTE

If you press an on-screen knob that you want to control, you will be able to operate the knob via the [TOUCH AND TURN] knob.

If you select RY card slot 1 on the I/O rack (M1), "M1/RY SLOT1" will appear.

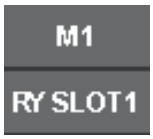

4. Use the knob in the lower left corner to display the input channels.



5. Press the desired grid cell to patch a desired channel.

For this example, press the grid cell on which the input jack (M1/RY SLOT1/1) intersects with input channel (CH 1).



Patching the output ports

This section explains how to patch output channels to the output jacks to which the speaker system has been connected in the “Connecting the devices” section.

NOTE

The PATCH screen displays the input/output jacks assigned to the TWINLANe network.

1. Press the PATCH button on the menu bar in the touch screen.

The PATCH screen will appear.

2. Press the OUTPUT tab.



3. Use the knob in the upper-right corner to display the desired output jacks.



NOTE

If you press an on-screen knob that you want to control, you will be able to operate the knob via the [TOUCH AND TURN] knob.

If you select RY card slot 2 on the I/O rack (M1), “M1/RY SLOT2” will appear.



4. Use the knob in the lower-left corner to display the output channels.



5. Press the desired grid cell to patch a desired channel.

For this example, press the grid cells on which the output jacks (M1/RY SLOT2/1,2) intersect with output channels (ST A L, R).



Setting the analog gain for HA (Head Amp)

This section explains how to set the analog gain for the HA (Head Amp) that was patched to the input channel in the "Patching input ports" section.

1. In the top panel's Channel Strip section, press the [SEL] key of the channel that was patched to the input jack (to which the microphone is connected).



2. While playing/singing into the microphone, adjust the head amp gain by rotating the [ANALOG GAIN] knob in the Selected Channel section.

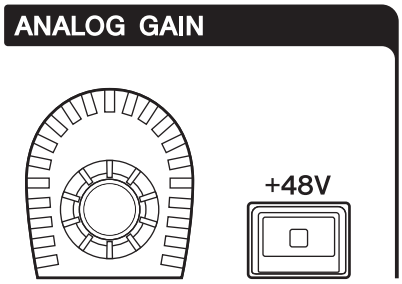

At this time, you can view the level on the METER screen.

3. If your microphone requires phantom power, press the corresponding [+48V] key to turn phantom power on.

NOTICE

<About phantom power>

The phantom power master switch on the I/O rack must be turned on first. Make sure that the [+48V] key is turned off unless it is needed.

If you plan to turn phantom power on, follow the rules described below to prevent the system or external devices from malfunctioning, or to avoid noise:

- Turn phantom power off before you connect a device that does not support phantom power.
- Do not connect or disconnect cables while phantom power is on.
- Be sure to set the output level controls to minimum when you turn phantom power on or off.

Sending an input channel signal to the STEREO bus

This section explains how to route an input channel to the STEREO bus.

1. In the top panel's Channel Strip section, press the [SEL] key for the input channel that you want to control.



2. In the Selected Channel section, make sure that the TO ST [A] key (→ page 15 ❹) is on.

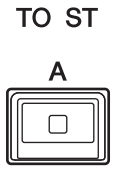

If the TO ST [A] key is off (the LED is dark), press the key to turn it on (the LED will light).

3. Make sure that the [ON] key of the input channel is turned on.



If the [ON] key is off (the LED is dark), press the key to turn it on (the LED will light).

4. Make sure that the [ON] key of the STEREO A channel on the top panel is turned on.



5. Raise the master fader for the STEREO A channel to 0 dB.

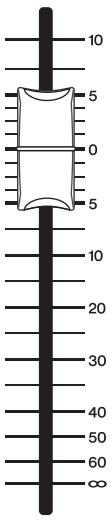

6. Raise the input channel fader to obtain an appropriate volume.

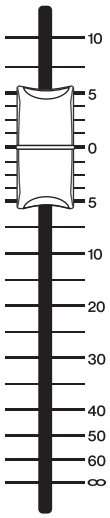

In this state, you should hear sound from the speaker system patched to the STEREO A channel. If you don't hear sound, watch the meter on the METER screen to see whether the meter is moving.

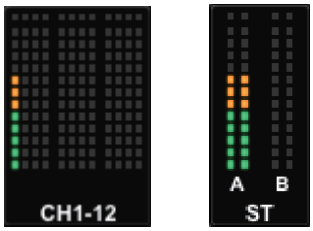

If the input meter is not moving

Make sure that signals are being routed correctly to the patched input channel.

If the meter is moving but no sound is heard

It may be that the output jacks that are connected to your speaker system are not patched correctly. Check the output port patching.

7. To adjust the pan/balance of the signal sent from the input channel to the STEREO bus, rotate the [PAN/BAL] knob (➔ page 16 ❼) of the Selected Channel section.

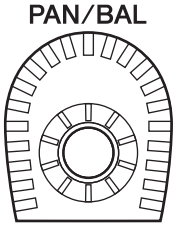

Check list

You can use the following list to check whether the basic connections for the RIVAGE PM7 system are working properly.

Both power A and B for each device must be turned on.

→ Make sure that two power cords are connected to each device and that both power switches A and B on each device are turned on.

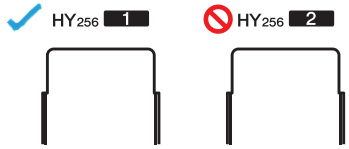

An HY card (HY256-TL) must be installed in HY card slot 1 on the rear panel and the I/O rack.

→ An HY card does not work in card slots 2 and 3 on the rear panel. Install the card in card slot 1 on the rear panel or on the I/O rack.

Fiber optic cables for the TWINLANe network and CAT5e cables for the console network must be connected between IN and OUT jacks respectively to form a ring topology.

→ Connecting IN jacks to IN jacks or OUT jacks to OUT jacks does not work. Make sure you connect the cables properly.

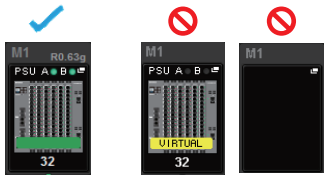

The I/O rack must be connected to and recognized by the system (SYSTEM CONFIG screen).

→ Press the I/O rack select button to set the rack correctly (→ page 38).



Channels must be assigned to the TWINLANe network correctly (SYSTEM CONFIG screen).

→ Modify channel assignment so that the total number of channels used on the TWINLANe network is 400 or less across all components.

→ Refer to "Assigning channels to the TWINLANe network (→ page 38)" to make sure that your I/O rack settings are correct.

→ Refer to "Assigning channels to the TWINLANe network (→ page 38)" to make sure that your DSP settings are correct.

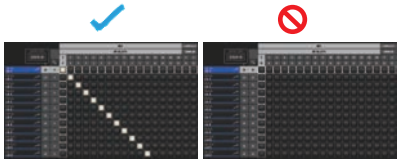

The input ports must be patched correctly (Input Patch screen).

→ Refer to "Patching input ports (→ page 40)" for information on how to patch input ports correctly.

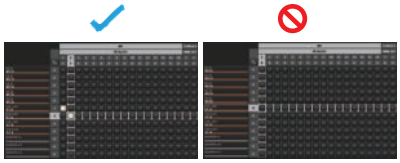

The output patches must be set correctly (on the DSP engine setting screen).

→ Refer to "Patching output ports (→ page 41)" for information on how to patch output ports correctly.

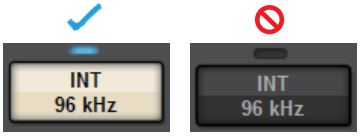

The word clock must be set correctly (WORD CLOCK screen).

→ Refer to "Setting the word clock (→ page 38)" for information on how to set the word clock correctly.



The status of TWINLANe network communication must be normal. (The indicators of the HY256-TL.)

→ Make sure that the fiber optic cables are properly connected.



The synchronization must be finished (DEVICE SYNC screen).

→ Press the SYNC button to set the synchronization correctly (→ page 37).

OK

Other Operations

Initializing the unit to factory default settings

If an error occurs in the unit's internal memory, or if you forget the password and cannot operate the unit, you can use the following procedure to initialize the internal memory.

NOTICE

When you initialize the internal memory, all content that had been saved in memory will be lost.

Use caution when performing the following steps.

1. Press the SETUP button on the menu bar in the touch screen.



The SETUP screen will appear.

2. Press the MAINTENANCE button.



The MAINTENANCE popup window will appear.

This window includes several pages, which you can switch between using the tabs located at the top of the window.



3. Press the INITIALIZATION tab.

4. You can select multiple items to be initialized as required by the desired initialization method.

- SYSTEM LOG
- LIBRARY
- SCENE
- OTHER

5. Press the INITIALIZE THIS CONSOLE button.

A dialog box will ask you to confirm the operation.

6. Press the OK button in the confirmation dialog box.

The Initialization operation starts.

NOTE

The digital mixing console will restart after initialization.

Adjusting the faders (Calibration function)

Depending on the environment in which you use the system, discrepancies may occur in the motion of the motorized faders. You can use the Calibration function to correct these discrepancies. The RIVAGE PM7 system features two types of fader calibration.

Motor Drive Calibration	Automatically optimizes the motorized fader movement.
Positioning Calibration	Calibrates the motorized fader movement so that the fader knob positions and the level values stored in the console (parameter) will match.

NOTE

An alarm message will appear if a problem is detected in the fader settings while the RIVAGE PM7 system is starting up.

1. Press the SETUP button on the menu bar in the touch screen.



The SETUP screen will appear.

2. Press the MAINTENANCE button.



The MAINTENANCE popup window will appear.

This window includes several pages, which you can switch between using the tabs located at the top of the window.



3. Press the FADER CALIB tab.

The FADER CALIBRATION screen will appear, which will enable you to adjust the faders.

4. Select the tab for the desired fader calibration operation.



If MOTOR DRIVE is selected:
For the specified faders in the Channel Strip section and Master section, the motorized fader movement will be automatically calibrated.

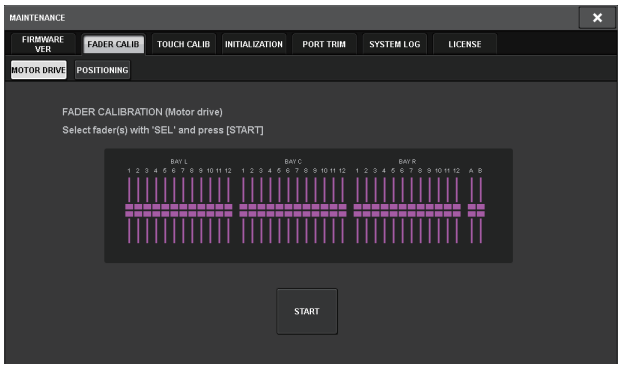

5. Press the [SEL] key for each fader that you want to calibrate.

Faders for which a problem was detected in the fader settings at start-up will already be selected.

6. Press the START button.

The system starts optimizing the movement of the motorized faders. The corresponding [SEL] keys will flash during calibration.

To cancel in the middle of calibration, press the STOP button. When optimization of the motorized fader movement is complete, the [SEL] keys will go dark.

7. When calibration has been completed, press the FINISH button.

The calibration values will be saved in internal memory. If the [SEL] key lights and the channel color indicator becomes red, calibration has failed. Press the START button to perform calibration again.

If POSITIONING is selected:
For the specified faders in the Channel Strip section and Master section, the fader position will be calibrated.

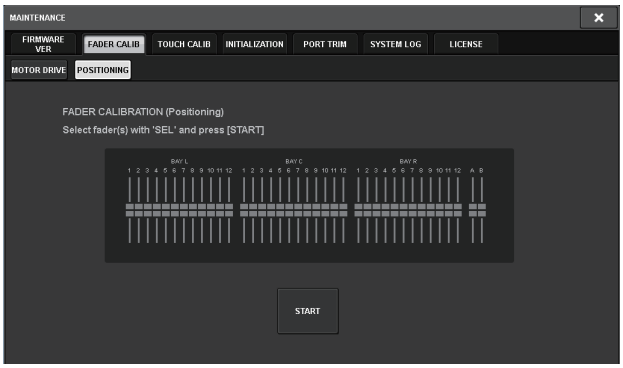

5. Press the [SEL] key for each fader that you want to calibrate.

Faders for which a problem was detected in the fader settings at start-up will already be selected.

6. Press the START button.

7. Each of the specified faders will move to the target positions in the following sequence.

Manually move the faders to the correct positions.

(1) –∞ dB (all the way down)

(2) –20 dB

(3) 0 dB

(4) +10 dB (all the way up)

8. After you adjust the fader position, press the NEXT button.

The process will proceed to the next fader position.

9. Repeat steps 7 and 8 to adjust the faders for positions (1) through (4).

10. When calibration is complete, press the FINISH button.

The calibration values will be saved in internal memory. If the [SEL] key lights and the channel color indicator turns red, calibration has failed. Press the START button to perform calibration again.

Troubleshooting

Please visit the Yamaha Pro Audio website for a list of frequently asked questions (FAQ).

https://www.yamahaproaudio.com/

Power does not turn on.

- ❍ Make sure that the power switches are turned ON.
- ❍ Make sure that the AC power cords are connected.

➥ If the power still does not turn on, contact your Yamaha dealer.

The unit is not receiving an audio input signal.

- ❍ If you are using an optional card, make sure that it is installed properly.
- ❍ Make sure that the cables are connected properly.
- ❍ Make sure that the [ON] key indicator of the input channel lights steadily.
- ❍ Make sure that the fader of the input channel is raised.
- ❍ Make sure that the input ports are patched correctly.
- ❍ Make sure that the channels are assigned to the TWINLANe network correctly.

Sound is not loud enough.

- ❍ Make sure that the head amp gain is set to an appropriate level.
- ❍ Make sure that the digital gain is set to an appropriate level.
- ❍ Make sure that the fader of the input channel is raised.
- ❍ Make sure that the fader of the output channel is raised.
- ❍ Check the levels on the METER screen.

Sound is distorted.

- ❍ Make sure that the word clock is set correctly.
- ❍ Make sure that the head amp is set correctly.
- ❍ Make sure that the fader of the input channel is not raised too high.
- ❍ Make sure that the fader of the output channel is not raised too high.

Touch screens, LEDs and/or lamps are not bright enough.

- ❍ The brightness parameter on the SETUP screen may be set too low.

In the LCD display, there are some dots that are always dark or always lit.

- ❍ This is a common property of color LCD, not a malfunction.

Specifications

General Specifications

At the time of measurement, all faders are set to nominal. Output impedance of the signal generator is 150Ω.

Frequency response

Fs= 44.1 kHz, 48 kHz, 88.2 kHz, 96 kHz @20 Hz–20 kHz, reference to the nominal output level @1 kHz

Inputs	Outputs	RL	Conditions	Min.	Typ.	Max.	Unit
OMNI IN 1-8	OMNI OUT 1-8	600Ω	GAIN: +66 dB	–0.8	0.0	0.5	dB

Total harmonic distortion

Fs= 44.1 kHz, 48 kHz, 88.2 kHz, 96 kHz

Inputs	Outputs	RL	Conditions	Min.	Typ.	Max.	Unit
OMNI IN 1-8	OMNI OUT 1-8	600Ω	+4 dBu@20 Hz–20 kHz, GAIN: +66 dB			0.12	%
OMNI IN 1-8	OMNI OUT 1-8	600Ω	+4 dBu@20 Hz–20 kHz, GAIN: –6 dB			0.05	%
Internal OSC	OMNI OUT 1-8	600Ω	Full scale output @1 kHz			0.02	%
Internal OSC	PHONES	8Ω	Full scale output @1 kHz, phones level control: max.			0.2	%

* An 80kHz, 18 dB/octave low pass filter is used to measure total harmonic distortion.

Hum & noise*2

Fs= 44.1 kHz, 48 kHz, 88.2 kHz, 96 kHz

Inputs	Outputs	RL	Conditions	Min.	Typ.	Max.	Unit
OMNI IN 1-8	OMNI OUT 1-8	600Ω	Rs= 150Ω, GAIN: +66 dB Master fader at nominal level and one Ch fader at nominal level.		–128 EIN*1		dBu
					–62		dBu
OMNI IN 1-8	OMNI OUT 1-8	600Ω	Rs= 150Ω, GAIN: –6 dB Master fader at nominal level and one Ch fader at nominal level.		–90	-85	dBu
All Inputs	OMNI OUT 1-8	600Ω	Rs= 150Ω, GAIN: –6 dB Master fader at nominal level and all OMNI IN1-8 in faders at nominal level.			-76	dBu
—	OMNI OUT 1-8	600Ω	Residual output noise, ST master off.		–92		dBu
—	PHONES	8Ω	Residual output noise, phones level control min.			–88	dBu

*1. EIN stands for Equivalent Input Noise.
*2. An IHF-A filter is used to measure hum & noise level.

Dynamic range

Fs= 44.1 kHz, 48 kHz, 88.2 kHz, 96 kHz

Inputs	Outputs	RL	Conditions	Min.	Typ.	Max.	Unit
OMNI IN 1-8	OMNI OUT 1-8	600Ω	AD + DA, GAIN: –6 dB		114		dB
—	OMNI OUT 1-8	600Ω	DA Converter		116		dB

* An IHF-A filter is used to measure dynamic range.

Crosstalk

@1 kHz Fs= 44.1 kHz, 48 kHz, 88.2 kHz, 96 kHz

from/to	to/from	Conditions	Min.	Typ.	Max.	Unit
OMNI IN n	OMNI IN (n-1) or (n+1)	OMNI IN 1-8 adjacent inputs, GAIN: –6 dB			–100	dB
OMNI OUT n	OMNI OUT (n-1) or (n+1)	OMNI OUT 1-8, input to output			–100	dB

* A 22 kHz, 30 dB/octave low pass filter is used to measure crosstalk.

Sampling frequency

		Conditions	Min.	Typ.	Max.	Unit
External clock	Frequency Range	Fs= 44.1 kHz, 48 kHz, 88.2 kHz, 96 kHz	–1000	—	+1000	ppm
	Jitter of PLL*1	DIGITAL IN Fs= 44.1 kHz, 48 kHz, 88.2 kHz, 96 kHz	—	—	10	ns
Internal clock	Frequency	Word clock : int 44.1 kHz Word clock : int 48 kHz Word clock : int 88.2 kHz Word clock : int 96 kHz	—	44.1 48 88.2 96	—	kHz
	Accuracy	Word clock : int 44.1 kHz, 48 kHz, 88.2 kHz, 96 kHz	–50	—	+50	ppm
	Jitter*2	Word clock : int 44.1 kHz Word clock : int 48 kHz Word clock : int 88.2 kHz Word clock : int 96 kHz	—	—	4.5 4.1 2.3 2.1	ns

*1. Input clock jitter must be 1 ns or less.
*2. Measured at the WORD CLOCK OUT connector.

Power requirements

	Conditions	Min.	Typ.	Max.	Unit
Power consumption	100–240 V 50/60 Hz	—	—	415	W
Heating value	100–240 V 50/60 Hz	—	—	360	kcal/h

Power cable length and temperature range

	Conditions	Min.	Typ.	Max.	Unit
Power cord length		—	250	—	cm
Temperature range	Operating temperature range	0	—	40	°C
	Storage temperature range	–20	—	60	°C

Analog Input Characteristics[*3*4*5]

Input Jack	Gain	Input Impedance	Source Impedance	Input Level			Connector	Balanced / Unbalanced
				Sensitivity[*1]	Rated Level	Max. Level Before Clipping		
OMNI IN 1-8	+66 dB	10 kΩ	50-600Ω Mics & 600Ω Lines	–82 dBu (61.6µV)	–62 dBu (0.616 mV)	–42 dBu (6.16 mV)	XLR-3-31 type[*2]	Balanced
	–6 dB			–10 dBu (245 mV)	+10 dBu (2.45 V)	+30 dBu (24.5 V)		
TALKBACK	+54 dB	10 kΩ	50-600Ω Mics & 600Ω Lines	–70 dBu (245 µV)	–50 dBu (2.45 mV)	–30 dBu (24.5 mV)	XLR-3-31 type[*2]	Balanced
	–6 dB			–10 dBu (245 mV)	+10 dBu (2.45 V)	+30 dBu (24.5 V)		

*1. Sensitivity is defined as the input level required to produce an output of +4 dBu (1.23 V) or the nominal output level when all faders and level controls are set to maximum.
*2. Connectors are balanced. (1=GND, 2=HOT, 3=COLD)
*3. 0 dBu=0.775 Vrms for all specifications
*4. All AD converters are 24-bit linear.
*5. OMNI IN jacks 1-8 and the TALKBACK XLR jack feature +48 V DC phantom power, which is switchable for each jack individually from the unit's software.

Analog output characteristics[*6*7*8]

Output Jack	Output Impedance	Load Impedance	Max Output Level Select Switch[*1*2]	Output Level		Connector	Balanced / Unbalanced
				Rated Level	Max. Level Before Clipping		
OMNI OUT 1-8	75Ω	600Ω Lines	+24 dBu (default)	+4 dBu (1.23 V)	+24 dBu (12.3 V)	XLR-3-32 type[*3]	Balanced
			+18 dBu	–2 dBu (0.616 V)	+18 dBu (6.16 V)		
			+15 dBu	–5 dBu (0.436 V)	+15 dBu (4.36 V)		
PHONES A, B	15Ω	8Ω Phones	—	75 mW[*4]	150 mW	Stereo Phone Jack (TRS)[*5]	Unbalanced
		40Ω Phones	—	65 mW[*4]	150 mW		

*1. The unit features an internal switch to change the maximum output level.
*2. The +24dBu switch position can be changed for fee so that the output level will be +20 dBu.
For more information, contact your Yamaha dealer.
*3. Connectors are balanced. (1=GND, 2=HOT, 3=COLD)
*4. These measurements were obtained when the PHONES A/B LEVEL knobs are set 10 dB lower than the maximum.
*5. Connectors are unbalanced. (Tip=LEFT, Ring=RIGHT, Sleeve=GND)
*6. 0 dBu=0.775 Vrms for all specifications
*7. All DA converters are 24-bit linear.

Digital I/O characteristics

Jack	Format	Data Length	Level	Connector	Balanced / Unbalanced
AES/EBU IN 1/2, 3/4, 5/6, 7/8[*1]	AES/EBU	24 bit	RS422	XLR-3-31 type[*2]	Balanced
AES/EBU OUT 1/2, 3/4, 5/6, 7/8[*1]	AES/EBU	24 bit	RS422	XLR-3-32 type[*2]	Balanced

*1. Features sampling rate converters.
• Input SRC
Supported input frequency (conversion source): 44.1 kHz-4%-200 ppm – 96 kHz+4.1667%+200 ppm
• Output SRC
Supported output frequency (conversion destination): 44.1 kHz-4%-200 ppm – 96 kHz+4.1667%+200 ppm
*2. Connectors are balanced. (1=GND, 2=HOT, 3=COLD)

Control I/O characteristics

Terminal		Format	Level	Connector
WORD CLOCK	IN	—	TTL/75Ω terminated	BNC
	OUT	—	TTL/75Ω	BNC
MIDI	IN	MIDI	—	DIN 5pin
	OUT	MIDI	—	DIN 5pin
TC IN	SMPTE	SMPTE	0.3Vpp(min)/10.0Vpp(max), 10kΩ	XLR-3-31 type*7
USB 1-4		USB 2.0 Host	USB	USB A (Female)
RECORDING*1		USB 2.0 Host	USB	USB A (Female)
VIDEO OUT		—	DVI-D	DVI
NETWORK		IEEE802.3	10BASE-T/100BASE-TX	etherCON CAT5*2 *3
NETWORK [PC]		IEEE802.3	10BASE-T/100BASE-TX	etherCON CAT5*2 *3
CONSOLE NETWORK IN/OUT		—	1000BASE-T	etherCON CAT5e*3 *4
GPI*5		—	—	D-SUB (25-pin, female)
LAMP 1-4		—	0 V–12 V	XLR-4-31 type*6

*1. Supported file formats are WAV and MP3.
*2. CAT5 or higher cables are used for connections.
*3. STP cables are recommended for connections.
*4. CAT5e or higher cables are used for connections.
*5. Input pin
CH 1-7: TTL level (input voltage 0-5 V)
CH 8: Photo coupler (input voltage 0-24 V, low level: 1 V or lower, high level: 5 V or higher)
Output pin
CH 1-7: Open drain output (max. supply voltage 12 V, max. sink current/pin 75 mA)
CH 8: Relay contact (max. 1A/30VDC)
Power supply pin
Output voltage 5 V ±5%, max. output current 600 mA
*6. 4-pin=+12 V, 3-pin=GND; Up to 5 W is supported for lamp rating.
*7. 1=GND, 2=HOT, 3=COLD, Balanced

Dimensions (WxHxD), weight

1549 mm × 417 mm × 848 mm (including the rubber feet), 94 kg

Accessories

System Setup Guide, AC power cords ×2, Dust cover

Optional items

Mini-YGDAI card, HY card

Fader

Touch-sensitive 100mm motorized faders; resolution +10 dB to –138 dB, –∞ dB (1024 steps)

NC value

Low mode: NC=20 / High mode: NC=25

Measuring position: 30cm horizontally away and vertically up from the unit (front pad),

Pin Assignment Table

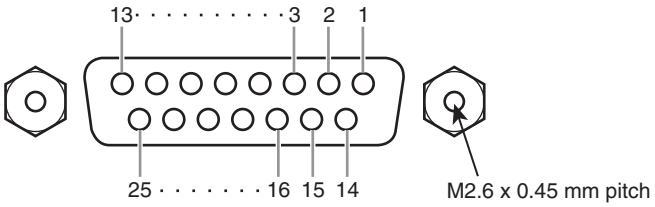

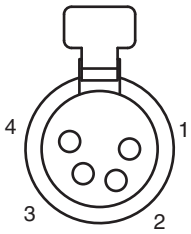

GPI

Pin No.	Signal
1	GPO1
2	GPO3
3	GPO5
4	GPO7
5	RLY_C
6	GND
7	GND
8	OPTO+
9	+5V
10	GPI2
11	GPI4
12	GPI6
13	N.C.

Pin No.	Signal
14	GPO2
15	GPO4
16	GPO6
17	RLY_NC
18	RLY_NO
19	GND
20	OPTO-
21	+5V
22	GPI1
23	GPI3
24	GPI5
25	GPI7

LAMP

Pin No.	Signal
1	N.C.
2	N.C.
3	GND
4	+12V

Dimensional Diagrams

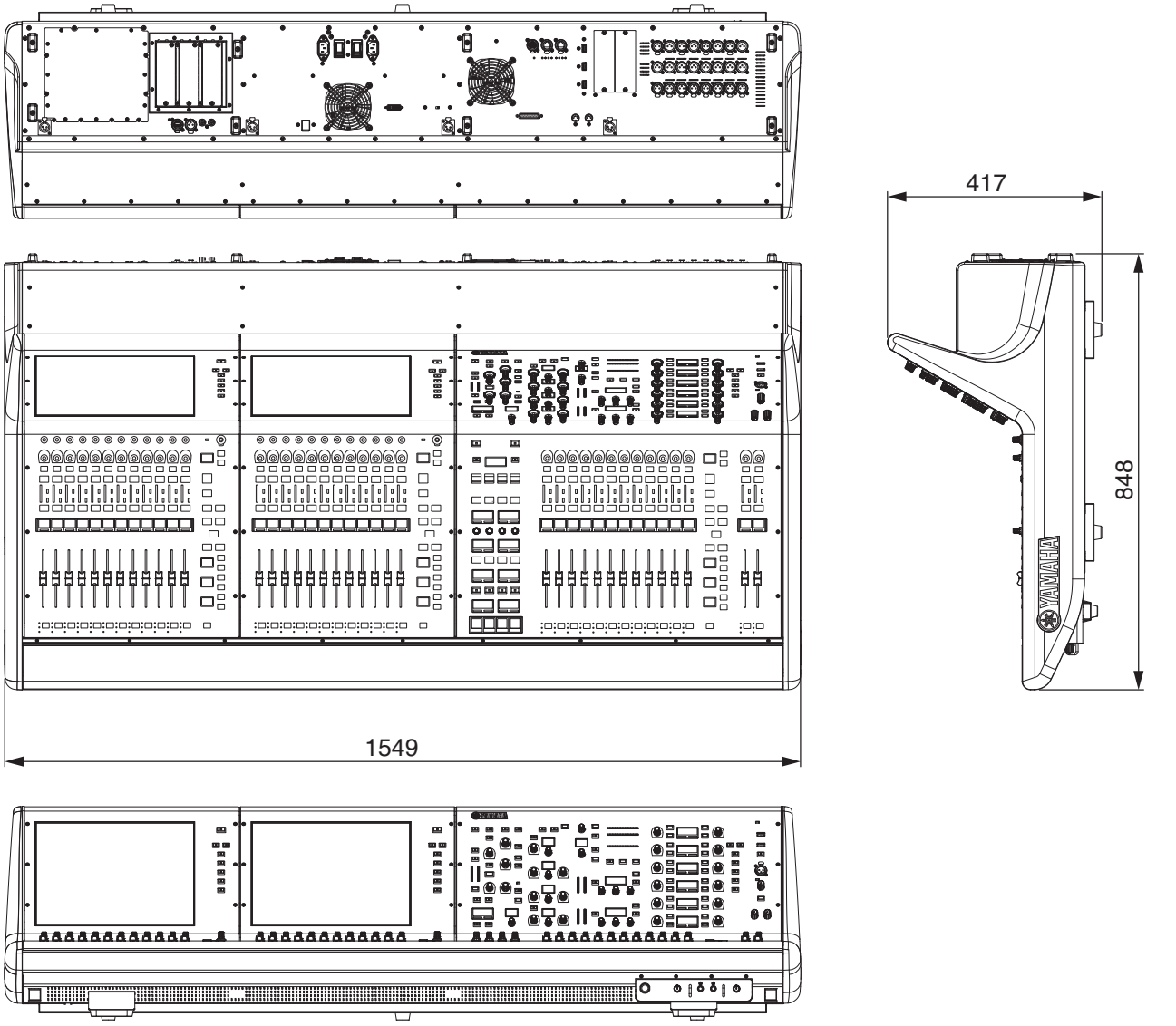

Unit: mm

Approximate Munsell value of exterior color: N5

* The contents of this manual apply to the latest specifications as of the publishing date. To obtain the latest manual, access the Yamaha website then download the manual file.

Index

C

Calibration 45
Channel strip encoder 23
Check list 44

F

Front panel 26

H

HA (Head Amp) 42
HY card 35

I

Initializing 45
Input port 40
ISOLATE 15

M

Mini-YGDAI card 30

O

Optional Cards
- HY card 35
- Mini-YGDAI card 30
- RY card 35

Output port 41
OVERLAY 20

P

Patch
- input port 40
- output port 41

R

Rear panel 27
Ring connection 11
RY card 35

S

Screen encoder 23
Shutting down 29
SILK 16

T

Top panel
- Channel Strip section 23
- SCENE MEMORY section 20
- Selected Channel section 15
- Touch Screen section 22
- USER DEFINED KEYS/KNOBS section 21
- UTILITY section 19

TOUCH AND TURN knob 25
Touch Screen 33
TWINLANe network 11, 38

U

Unit ID 36

W

Word clock 38

MEMO

Important Notice: Guarantee Information for customers in European Economic Area (EEA) and Switzerland

English

Important Notice: Guarantee Information for customers in EEA* and Switzerland

For detailed guarantee information about this Yamaha product, and Pan-EEA* and Switzerland warranty service, please either visit the website address below (Printable file is available at our website) or contact the Yamaha representative office for your country. * EEA: European Economic Area

Deutsch

Wichtiger Hinweis: Garantie-Information für Kunden in der EWR* und der Schweiz

Für nähere Garantie-Information über dieses Produkt von Yamaha, sowie über den Pan-EWR*- und Schweizer Garantieservice, besuchen Sie bitte entweder die folgend angegebene Internetadresse (eine druckfähige Version befindet sich auch auf unserer Webseite), oder wenden Sie sich an den für Ihr Land zuständigen Yamaha-Vertrieb. *EWR: Europäischer Wirtschaftsraum

Français

Remarque importante: informations de garantie pour les clients de l'EEE et la Suisse

Pour des informations plus détaillées sur la garantie de ce produit Yamaha et sur le service de garantie applicable dans l'ensemble de l'EEE ainsi qu'en Suisse, consultez notre site Web à l'adresse ci-dessous (le fichier imprimable est disponible sur notre site Web) ou contactez directement Yamaha dans votre pays de résidence. * EEE : Espace Economique Européen

Nederlands

Belangrijke mededeling: Garantie-informatie voor klanten in de EER* en Zwitserland

Voor gedetailleerde garantie-informatie over dit Yamaha-product en de garantieservice in heel de EER* en Zwitserland, gaat u naar de onderstaande website (u vind een afdrukbaar bestand op onze website) of neemt u contact op met de vertegenwoordiging van Yamaha in uw land. * EER: Europese Economische Ruimte

Español

Aviso importante: información sobre la garantía para los clientes del EEE* y Suiza

Para una información detallada sobre este producto Yamaha y sobre el soporte de garantía en la zona EEE* y Suiza, visite la dirección web que se incluye más abajo (la version del archivo para imprimir esta disponible en nuestro sitio web) o póngase en contacto con el representante de Yamaha en su país. * EEE: Espacio Económico Europeo

Italiano

Avviso importante: informazioni sulla garanzia per i clienti residenti nell'EEA* e in Svizzera

Per informazioni dettagliate sulla garanzia relativa a questo prodotto Yamaha e l'assistenza in garanzia nei paesi EEA* e in Svizzera, potete consultare il sito Web all'indirizzo riportato di seguito (è disponibile il file in formato stampabile) oppure contattare l'ufficio di rappresentanza locale della Yamaha. * EEA: Area Economica Europea

Português

Aviso importante: informações sobre as garantias para clientes da AEE* e da Suíça

Para obter uma informação pormenorizada sobre este produto da Yamaha e sobre o serviço de garantia na AEE* e na Suíça, visite o site a seguir (o arquivo para impressão está disponível no nosso site) ou entre em contato com o escritório de representação da Yamaha no seu país. * AEE: Área Econômica Européia

Ελληνικά

Σημαντική σημείωση: Πληροφορίες εγγύησης για τους πελάτες στον ΕΟΧ* και Ελβετία

Για λεπτομερείς πληροφορίες εγγύησης σχετικά με το παρόν προϊόν της Yamaha και την κάλυψη εγγύησης σε όλες τις χώρες του ΕΟΧ και την Ελβετία, επισκεφτείτε την παρακάτω ιστοσελίδα (Εκτυπώσιμη μορφή είναι διαθέσιμη στην ιστοσελίδα μας) ή απευθυνθείτε στην αντιπροσωπεία της Yamaha στη χώρα σας. * ΕΟΧ: Ευρωπαϊκός Οικονομικός Χώρος

Svenska

Viktigt: Garantiinformation för kunder i EES-området* och Schweiz

För detaljerad information om denna Yamahaprodukt samt garantiservice i hela EES-området* och Schweiz kan du antingen besöka nedanstående webbaddress (en utskriftsvänlig fil finns på webbplatsen) eller kontakta Yamahas officiella representant i ditt land. * EES: Europeiska Ekonomiska Samarbetsområdet

Norsk

Viktig merknad: Garantiinformasjon for kunder i EØS* og Sveits

Detaljert garantiinformasjon om dette Yamaha-produktet og garantiservice for hele EØS-området* og Sveits kan fås enten ved å besøke nettadressen nedenfor (utskriftsversjon finnes på våre nettsider) eller kontakte Yamaha-kontoret i landet der du bor. *EØS: Det europeiske økonomiske samarbeidsområdet

Dansk

Vigtig oplysning: Garantioplysninger til kunder i EØO* og Schweiz

De kan finde detaljerede garantioplysninger om dette Yamaha-produkt og den fælles garantiserviceordning for EØO* (og Schweiz) ved at besøge det websted, der er angivet nedenfor (der findes en fil, som kan udskrives, på vores websted), eller ved at kontakte Yamahas nationale repræsentationskontor i det land, hvor De bor. * EØO: Det Europæiske Økonomiske Område

Suomi

Tärkeä ilmoitus: Takuutiedot Euroopan talousalueen (ETA)* ja Sveitsin asiakkaille

Tämän Yamaha-tuotteen sekä ETA-alueen ja Sveitsin takuuta koskevat yksityiskohtaiset tiedot saatte alla olevasta nettiosoitteesta. (Tulostettava tiedosto saatavissa sivustollamme.) Voitte myös ottaa yhteyttä paikalliseen Yamaha-edustajaan. *ETA: Euroopan talousalue

Polski

Ważne: Warunki gwarancyjne obowiązujące w EOG* i Szwajcarii

Aby dowiedzieć się więcej na temat warunków gwarancyjnych tego produktu firmy Yamaha i serwisu gwarancyjnego w całym EOG* i Szwajcarii, należy odwiedzić wskazaną poniżej stronę internetową (Plik gotowy do wydruku znajduje się na naszej stronie internetowej) lub skontaktować się z przedstawicielstwem firmy Yamaha w swoim kraju. * EOG — Europejski Obszar Gospodarczy

Česky

Důležité oznámení: Záruční informace pro zákazníky v EHS* a ve Švýcarsku

Podrobné záruční informace o tomto produktu Yamaha a záručním servisu v celém EHS* a ve Švýcarsku naleznete na níže uvedené webové adrese (soubor k tisku je dostupný na našich webových stránkách) nebo se můžete obrátit na zastoupení firmy Yamaha ve své zemi. * EHS: Evropský hospodářský prostor

Magyar

Fontos figyelmeztetés: Garancia-információk az EGT* területén és Svájcban élő vásárlók számára

A jelen Yamaha termékre vonatkozó részletes garancia-információk, valamint az EGT*-re és Svájcra kiterjedő garanciális szolgáltatás tekintetében keresse fel webhelyünket az alábbi címen (a webhelyen nyomtatható fájlt is talál), vagy pedig lépjen kapcsolatba az országában működő Yamaha képviseleti irodával. * EGT: Európai Gazdasági Térség

Eesti keel

Oluline märkus: Garantiiteave Euroopa Majanduspiirkonna (EMP)* ja Šveitsi klientidele

Täpsema teabe saamiseks selle Yamaha toote garantii ning kogu Euroopa Majanduspiirkonna ja Šveitsi garantiiteeninduse kohta, külastage palun veebisaiti alljärgneval aadressil (meie saidil on saadaval prinditav fail) või pöörduge Teie regiooni Yamaha esinduse poole. * EMP: Euroopa Majanduspiirkond

Latviešu

Svarīgs paziņojums: garantijas informācija klientiem EEZ* un Šveicē

Lai saņemtu detalizētu garantijas informāciju par šo Yamaha produktu, kā arī garantijas apkalpošanu EEZ* un Šveicē, lūdzu, apmeklējiet zemāk norādīto tīmekļa vietnes adresi (tīmekļa vietnē ir pieejams drukājams fails) vai sazinieties ar jūsu valsti apkalpojošo Yamaha pārstāvniecību. * EEZ: Eiropas Ekonomikas zona

Lietuvių kalba

Dėmesio: informacija dėl garantijos pirkėjams EEE* ir Šveicarijoje

Jei reikia išsamios informacijos apie šį „Yamaha" produktą ir jo techninę priežiūrą visoje EEE* ir Šveicarijoje, apsilankykite mūsų svetainėje toliau nurodytu adresu (svetainėje yra spausdintinas failas) arba kreipkitės į „Yamaha" atstovybę savo šaliai. *EEE – Europos ekonominė erdvė

Slovenčina

Dôležité upozornenie: Informácie o záruke pre zákazníkov v EHP* a Švajčiarsku

Podrobné informácie o záruke týkajúce sa tohto produktu od spoločnosti Yamaha a garančnom servise v EHP* a Švajčiarsku nájdete na webovej stránke uvedenej nižšie (na našej webovej stránke je k dispozícii súbor na tlač) alebo sa obráťte na zástupcu spoločnosti Yamaha vo svojej krajine. * EHP: Európsky hospodársky priestor

Slovenščina

Pomembno obvestilo: Informacije o garanciji za kupce v EGP* in Švici

Za podrobnejše informacije o tem Yamahinem izdelku ter garancijskem servisu v celotnem EGP in Švici, obiščite spletno mesto, ki je navedeno spodaj (natisljiva datoteka je na voljo na našem spletnem mestu), ali se obrnite na Yamahinega predstavnika v svoji državi. * EGP: Evropski gospodarski prostor

Български език

Важно съобщение: Информация за гаранцията за клиенти в ЕИП* и Швейцария

За подробна информация за гаранцията за този продукт на Yamaha и гаранционното обслужване в паневропейската зона на ЕИП* и Швейцария или посетете посочения по-долу уеб сайт (на нашия уеб сайт има файл за печат), или се свържете с представителния офис на Yamaha във вашата страна. * ЕИП: Европейско икономическо пространство

Limba română

Notificare importantă: Informaţii despre garanţie pentru clienţii din SEE* şi Elveţia

Pentru informaţii detaliate privind acest produs Yamaha şi serviciul de garanţie Pan-SEE* şi Elveţia, vizitaţi site-ul la adresa de mai jos (fişierul imprimabil este disponibil pe site-ul nostru) sau contactaţi biroul reprezentanţei Yamaha din ţara dumneavoastră. * SEE: Spaţiul Economic European

Hrvatski

Važna obavijest: Informacije o jamstvu za države EGP-a i Švicarske

Za detaljne informacije o jamstvu za ovaj Yamahin proizvod te jamstvenom servisu za cijeli EGP i Švicarsku, molimo Vas da posjetite web-stranicu navedenu u nastavku ili kontaktirate ovlaštenog Yamahinog dobavljača u svojoj zemlji. * EGP: Europski gospodarski prostor

https://europe.yamaha.com/warranty/

Yamaha Worldwide Representative Offices

English

For details on the product(s), contact your nearest Yamaha representative or the authorized distributor, found by accessing the 2D barcode below.

Deutsch

Wenden Sie sich für nähere Informationen zu Produkten an eine Yamaha-Vertretung oder einen autorisierten Händler in Ihrer Nähe. Diese finden Sie durch Scannen der unten abgebildeten quadratischen 2D-Matrix.

Français

Pour obtenir des informations sur le ou les produits, contactez votre représentant ou revendeur agréé Yamaha le plus proche. Vous le trouverez à l'aide du code-barres 2D ci-dessous.

Español

Para ver información detallada sobre el producto, contacte con su representante o distribuidor autorizado Yamaha más cercano. Lo encontrará escaneando el siguiente código de barras 2D.

Português

Para mais informações sobre o(s) produto(s), fale com seu representante da Yamaha mais próximo ou com o distribuidor autorizado acessando o código de barras 2D abaixo.

Italiano

Per dettagli sui prodotti, contattare il rappresentante Yamaha o il distributore autorizzato più vicino, che è possibile trovare tramite il codice a barre 2D in basso.

Nederlands

Neem voor meer informatie over de producten contact op met uw dichtstbijzijnde Yamaha-vertegenwoordiger of de geautoriseerde distributeur, te vinden via de onderstaande 2D-barcode.

Svenska

Om du vill ha mer information om produkterna kan du kontakta närmaste Yamaha-representant eller auktoriserade distributör med hjälp av 2D-streckkoden nedan.

Norsk

Hvis du vil ha detaljer om produktet/produktene, kan du kontakte din nærmeste Yamaha-representant eller autoriserte Yamaha-distributør, som du finner ved å skanne 2D-strekkoden nedenfor.

Dansk

Hvis du vil have detaljer om produktet/produkterne, kan du kontakte den nærmeste Yamaha-repræsentant eller autoriserede Yamaha-distributør, som du finder ved at scanne 2D-stregkode nedenfor.

Suomi

Jos tarvitset lisätietoa tuotteesta/tuotteista, ota yhteyttä lähimpään Yamahan edustajaan tai valtuutettuun jakelijaan. Löydät yhteystiedot lukemalla alla olevan 2D-viivakoodin.

Русский

Чтобы узнать подробнее о продукте (продуктах), свяжитесь с ближайшим представителем или авторизованным дистрибьютором Yamaha, воспользовавшись двухмерным штрихкодом ниже.

简体中文

如需有关产品的详细信息，请联系距您最近的Yamaha代表或授权经销商，可通过访问下方的二维码找到这些代表或经销商的信息。

繁體中文

如需產品的詳細資訊，請聯絡與您距離最近的 Yamaha 銷售代表或授權經銷商，您可以掃描下方的二維條碼查看相關聯絡資料。

한국어

제품에 대한 자세한 정보는 아래 2D 바코드에 엑세스하여 가까운 Yamaha 담당 판매점 또는 공식 대리점에 문의하십시오.

https://manual.yamaha.com/audio/address_list/

Head Office/Manufacturer: Yamaha Corporation 10-1, Nakazawa-cho, Chuo-ku, Hamamatsu, 430-8650, Japan
Importer (European Union): Yamaha Music Europe GmbH Siemensstrasse 22-34, 25462 Rellingen, Germany
Importer (United Kingdom): Yamaha Music Europe GmbH (UK) Sherbourne Drive, Tilbrook, Milton Keynes, MK7 8BL, United Kingdom
AP04

Yamaha Pro Audio global website
https://www.yamahaproaudio.com/

Yamaha Downloads
https://download.yamaha.com/

© 2018 Yamaha Corporation
Published 08/2026
IPTO-D0

VKQ0990