TRAXON | e:cue

e:cue

Genius 4CH



e:cue Interfaces

Lichtinstallation sind von Natur aus heterogen. e:cue Interfaces integrieren viele Netzwerke, Protokolle und Drittsysteme in e:cue-Lösungen. Sie erlauben spezielle Steuerungen von Leuchten, bilden analoge oder elektromechanische Signale in der digitalen Welt ab und schaffen Übergänge. e:cue Interfaces fassen die unterschiedlichsten Techniken und Technologien zu einer Gesamtlösung zusammen.

Genius 4CH

The Genius 4CH is a relay controller and energy meter that combines measuring and switching load in a single device. Communication with any third party system is made via the Modbus RTU / ASCII protocol at a RS-485 interface. The Genius 4CH provides four bistable relay interfaces in single-pole, single-throw configuration, accompanied by manual switches for service overrides. It is a modular basic solution for controlling lighting installations. The Genius 4CH is easily mounted on standard 35 mm DIN rails, or with a key hole in the housing base on walls or on any stable vertical surface. The Node is AC line powered.

Highlights

- Four bistable relay outputs SPST each for up to 20 A resistive load @ 230 V AC
- Measured data: Voltage,
  current,
  power (active, apparent, reactive),
  power factor,
  energy (active),
  phase,
  line frequency,
  status
- Connectivity via Modbus RTU / ASCII
- Flexible mounting on 35 mm DIN rails or surfaces

Delivery scope

	Identcode
– e:cue Genius 4CH	AM382130031

- Printed Genius 4CH Information for Use, Safety instructions
- USB A to USB Mini-B adapter cable

CE UK CA

Product specifications

Dimensions (W x H x D)	106.3 x 90.5 x 62 mm/ 4.2 x 3.6 x 2.4 in (excl. fastening clip)
Weight	320 g / 0.71 lb
Input power	200-240V ±10% 50/60Hz AC
Power consumption	< 3 W
Operating temperature	0 ... 50 °C / 32 ... 122 °F for > 40 °C, only use max. 2 channels up to 20 A load
Storage temperature	-10 ... 70 °C / 14 ... 158 °F
Operating / storage humidity	0 ... 80% RH, non-condensing
Overvoltage category	II
Installation conditions	IP20, not designed for outdoor use Intra-building connections only
Pollution degree	II
IEC protection class	Class II ⧈
Housing	Self extinguishing blend PC/ABS UL document E140692
Mounting	On 35 mm DIN rail (EN 60715) or with key hole on any stable vertical surface
Certificates	CE, RoHS, UKCA

Interface specifications

Relay outputs	4 x SPST feed-through latching relay with manual override, rising cage clamp for solid and stranded wire, wire gauge: 0.05 ... 5.26 mm² torque: 0.5 Nm Nominal voltage per channel: 115..230 V AC

Contact rating	Cycles
20 A, 230 V AC resistive load	1 x 10^5

Continued on next page

©2023 traxon technologies. Alle Rechte vorbehalten.

Genius 4CH

	4600 W, 230 V AC incandescent lamp	3 x 10^4
	16 A, 230 V AC electronic ballast	6 x 10^3
	Inrush current: 500 A peak / 2 ms Max operate frequency per channel: 10 ops. / min	
Measured data	Voltage, current, power (active, apparent, reactive), power factor, energy (active), phase, line frequency, status	
Measurement tolerance	± 3 %	
Serial port	Modbus RTU / ASCII (RS-485), 3-pin pluggable connector	
USB port	1 x Mini-USB, Type B	
User interface	Combined LED for data activity and device status	

Dimensions

All measures in mm

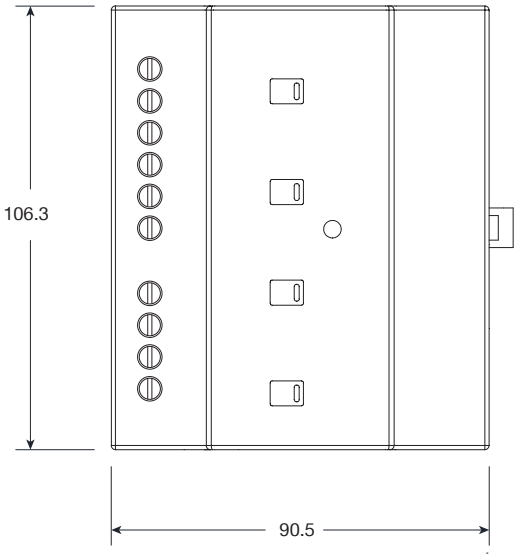

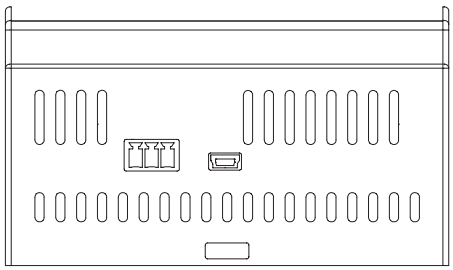

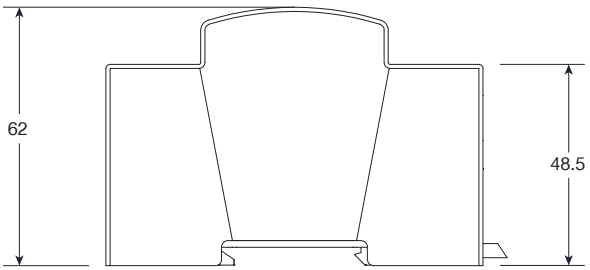

System diagrams

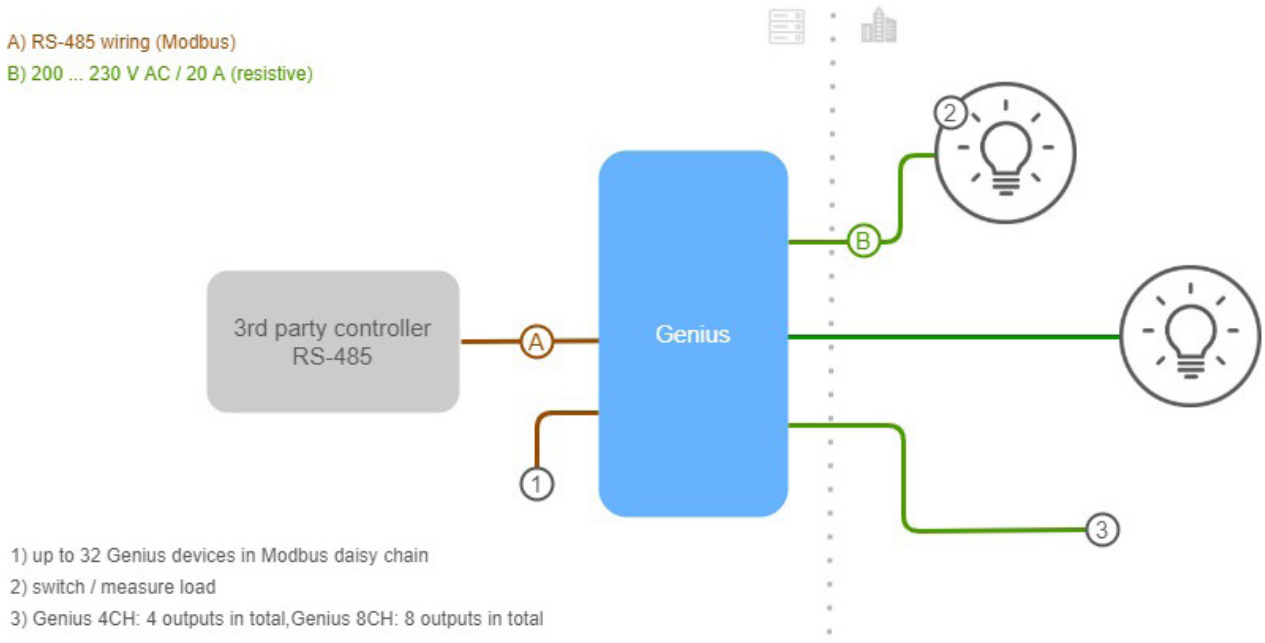

©2023 traxon technologies. Alle Rechte vorbehalten.

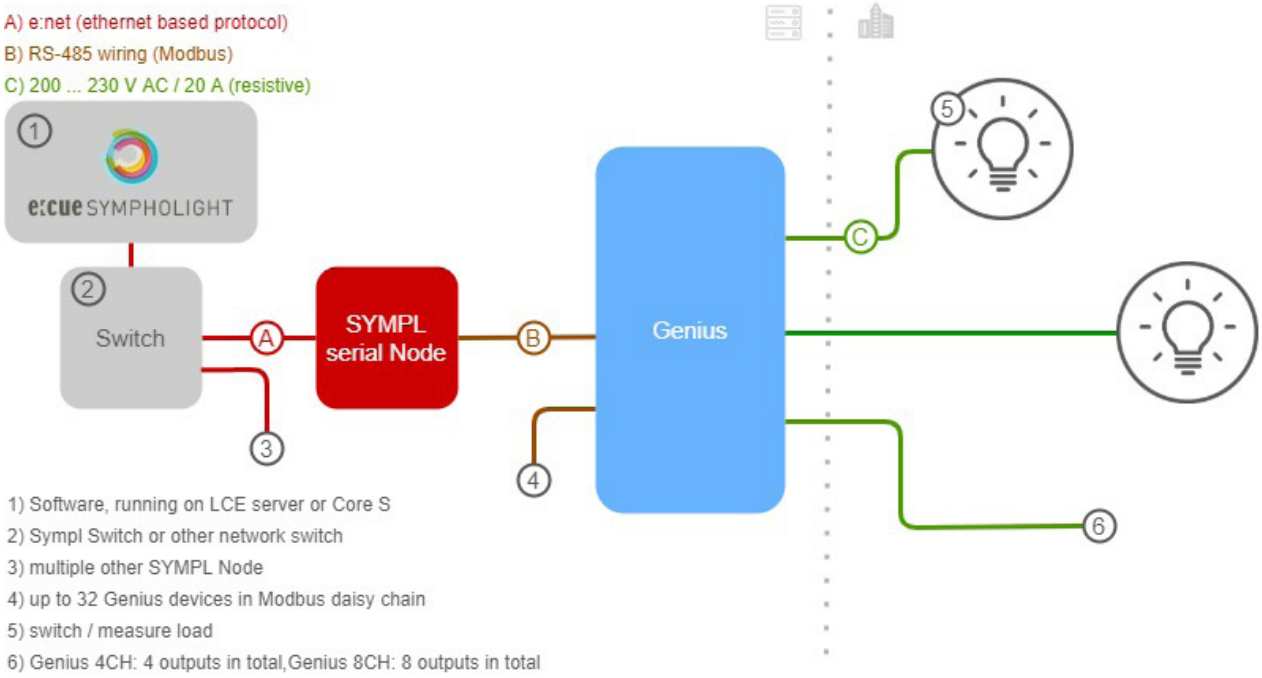

1) Software, running on LCE server or Core S
2) Sympl Switch or other network switch
3) multiple other SYMPL Node
4) up to 32 Genius devices in Modbus daisy chain
5) switch / measure load
6) Genius 4CH: 4 outputs in total,Genius 8CH: 8 outputs in total

Wiring diagram

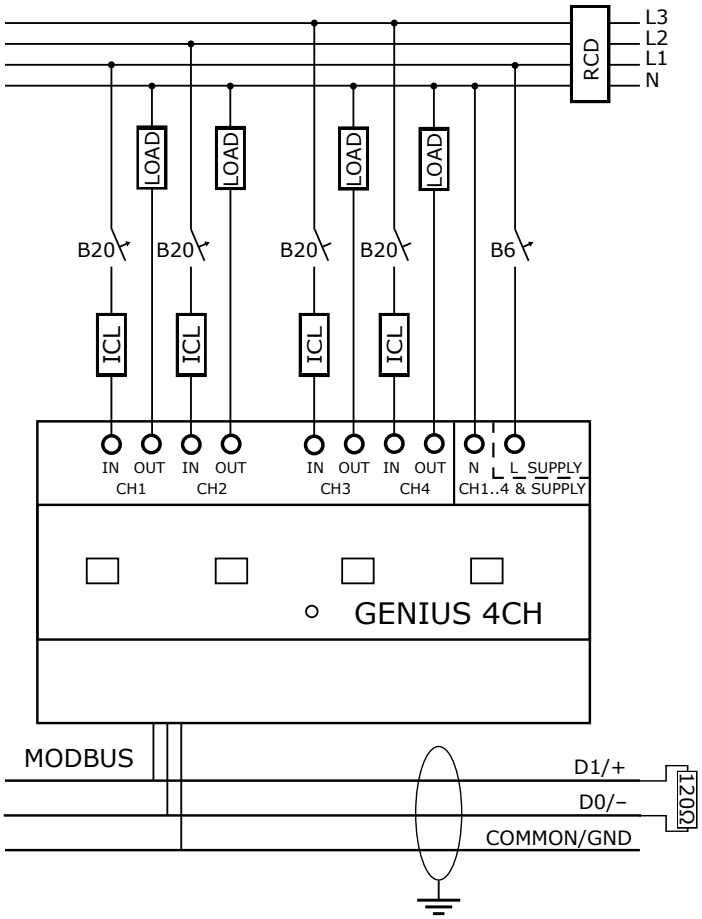

©2023 traxon technologies. Alle Rechte vorbehalten.