GENIO BlinderDot

The multi-role blinder in the GENIO system.



Description

GENIO BlinderDot is the emotional driver of the GENIO system — a blinder, pixel dot, par can, pendant and truss toner in one fixture, preconfigured for fast builds and connected into the GENIO family through SGM's tool-free connectors.

Features and benefits

- ✓ Works as an IP65-rated blinder, pixel dot, par can, pendant or truss toner — one fixture, multiple roles
- ✓ Single-source RGBALW colour with CRI up to 96
- ✓ Built-in NFC for quick setup and configuration
- ✓ Can be preconfigured in 4-Lite, 8-Lite or larger builds to match your setup
- ✓ Connects into the GENIO system with tool-free rigging connectors

Certifications & classifications

IP65 INGRESS · RoHS COMPLIANT · CE · ETL PENDING · UKCA

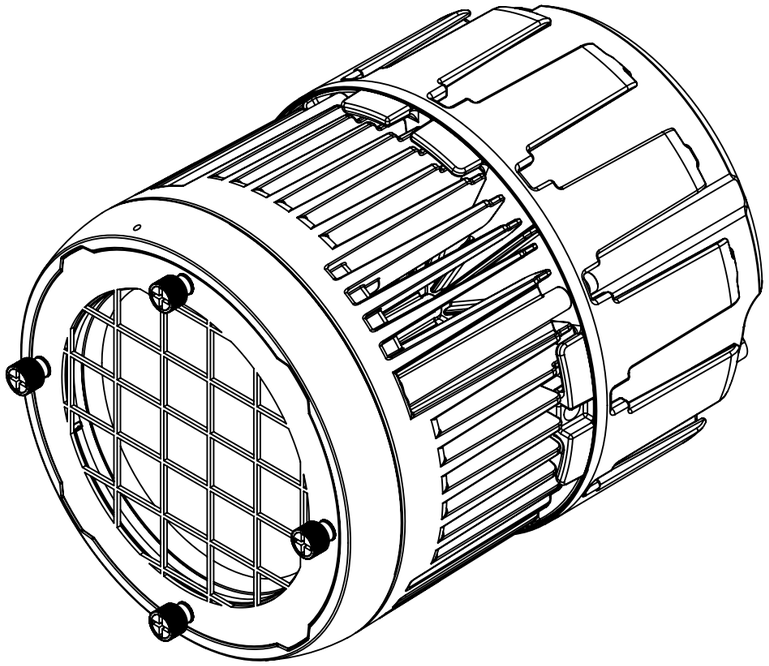

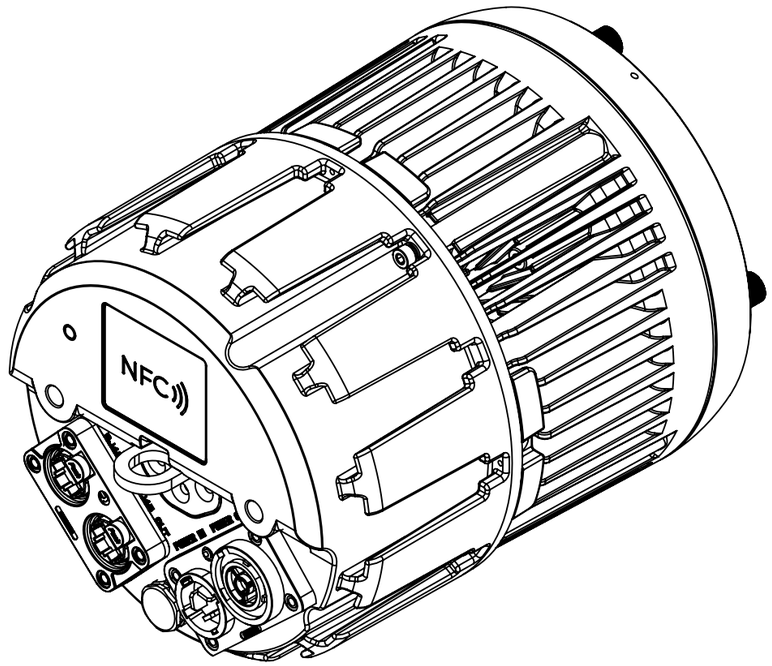

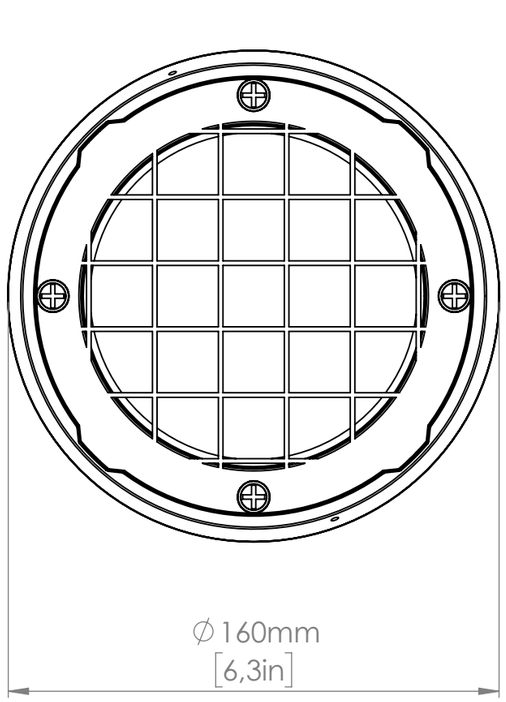

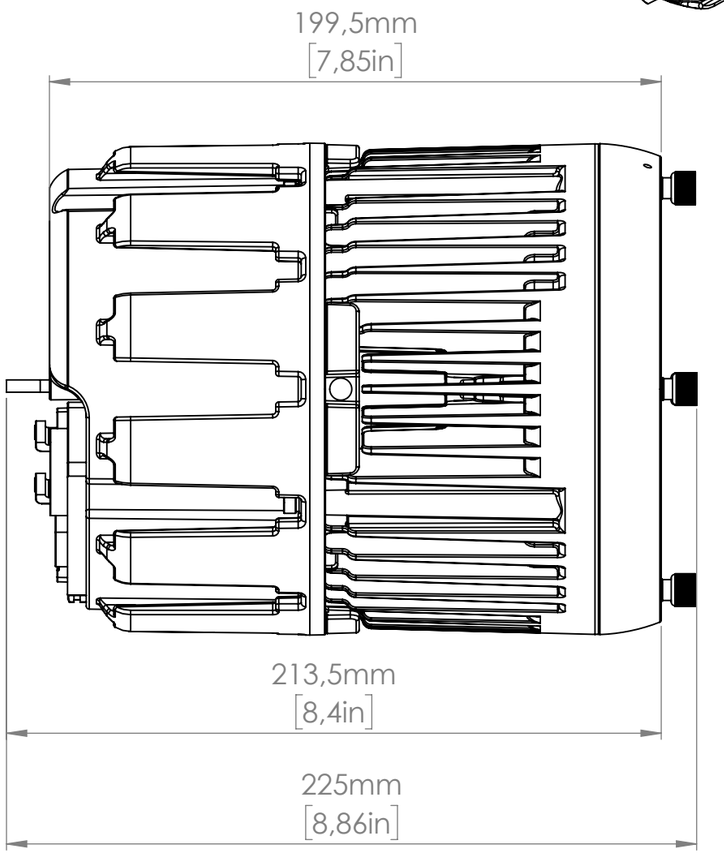

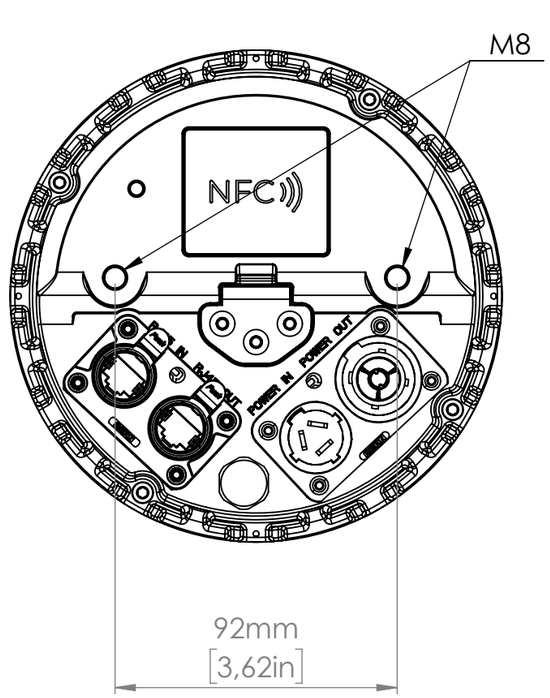

SGM®	All Dimensions are in mm	SHEET 1 OF 1	SHEET FORMAT: A3	DWG NO. 80300520	TITLE: GENIO BlinderDot
		SCALE:1:2	DO NOT SCALE DRAWING		

Copyright © SGM Lighting ApS. All rights reserved.

Specification

Optical Data	Lightsource	RGBALW
Photometric	Color quality - CRI	>90
	Color temperature range	2000K - 10000K
	Efficacy	41.5 lm/W*
	Light output - all on	17000 lm*
	Lux @ 3m	2081 lux
	Lux @ 5m	749 lux
	Native beam angle(s)	50°
	Native field angle(s)	90°
Physical	Color options	Black - RAL 9004
	IK rating	IK08
	IP class	IP65
	Material	Aluminium Plastic Stainless steel Tempered Glass
	Net dimensions L x H x W (imperial)	6.3 x 8.4 x 6.3 inches
	Net dimensions L x H x W (metric)	160 x 213 x 160 mm
	Net weight	3.5 kg (7.7 lbs)
Electrical	Input voltage (nominal)	100 - 240 VAC; 50 / 60 Hz
	Max power consumption	400 W
	Max power thru @ 100 V	4.2 A
	Max power thru @ 230 V	1.77 A
	Power factor	1 PF (230 V)
	Standby power consumption	6 W
Programming and Control	Protocol	sACN Art-Net
	Setting and addressing	NFC RDM
Connections	Ethernet Connections	RJ45 connectors
Installation	Maximum Units Vertical	17 pcs
	Mounting point	2 M-8 threaded mounting points (suitable for the optional rear-bracket)

	Rigging possibilities	Hanging (Using the GENIO compatible connectors)
	Safety features	Mount for safety wire
Thermal	Cooling	Active, Forced Air, Temperature-regulated
	Humidity (max.)	98 %
	Temperature range, operating	-20°C to 45°C
	Temperature range, start-up	-20°C to 45°C
	Temperature range, storage	-20°C to 45°C
	Thermal protection	Automatic overtemperature protection
	Total heat dissipation, max power	1364.8 BTU per hour
	Total heat dissipation, standby	20.5 BTU per hour
Included items	Included items	2 x GENIO Rigging Connector 1 x GENIO Fixture Connector, M Foam Insert

Ordering information

Qty	Product name	Item number
	GENIO BlinderDot	80300520

	Accessories	Item number
	GENIO Fixture Connector, M - Set of 6	83063254
	GENIO Rigging Connector - Set of 6	83063252

Headquarters +45 70 20 74 00
Mail info@sgmlighting.com
Website sgmlighting.com