WHEELS & BEAM SHAPER

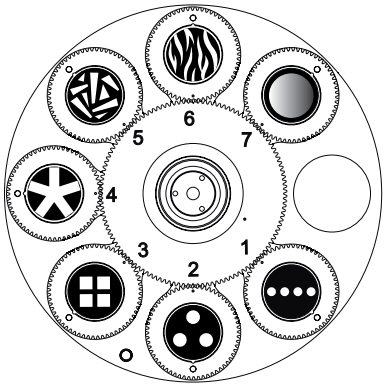

› Dimension/Tolerance/Requirement:

Black & White Gobo:

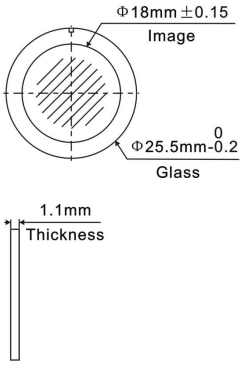

› Temperature Tolerance: 500°C

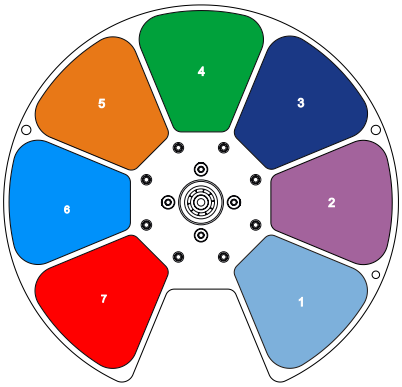

› Colour Filter Dimension:

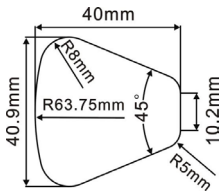

› Temperature Tolerance: 500°C

GOBO WHEEL 1

Rotating Gobo

1	314	Dot Line 4	GPG0500162
2	326	Dot Triangle 3	GPG0500165
3	332	Square Beam 4	GPG0500167
4	342	Five Spokes	GPG0500167
5	266	Breaking Glass	GPG0500166
6	098	Waves	GPG0500163
7	-	Scrim Filter	GPG0500396

This side facing LED module

COLOUR WHEEL

Animation Wheel

1	CTB 1/4	GP60305032892
2	Magenta	GP60305032893
3	Congo Blue	GP60305032894
4	Green	GP60305032895
5	Orange	GP60305032896
6	Blue	GP60305032897
7	Red	GP60305032898

This side facing LED module

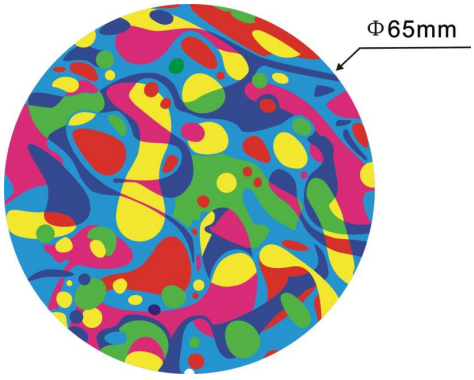

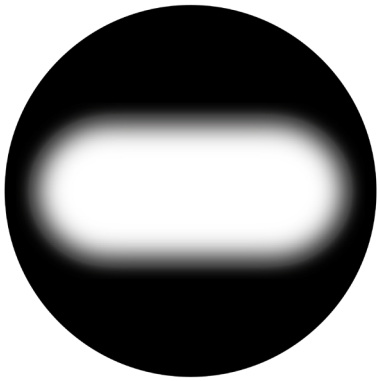

ANIMATION WHEEL

-	-	GP603039901290

BEAM SHAPER

-	-

FIXTURE DRAWINGS

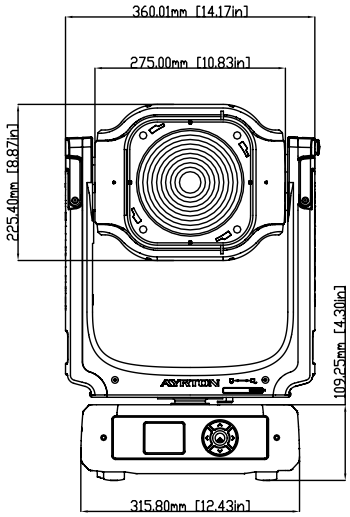

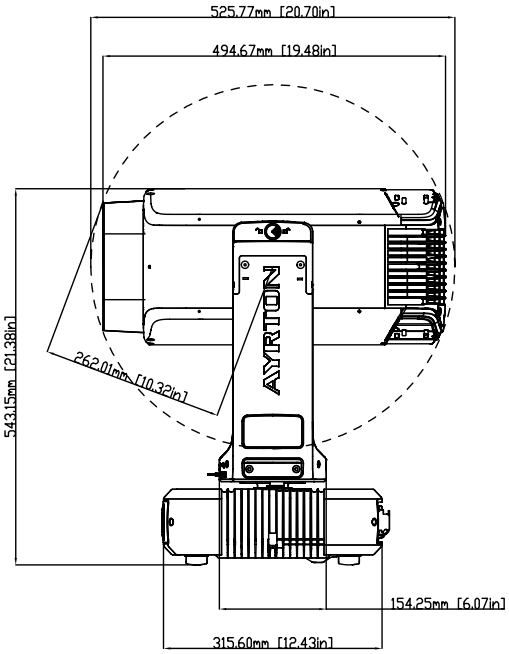

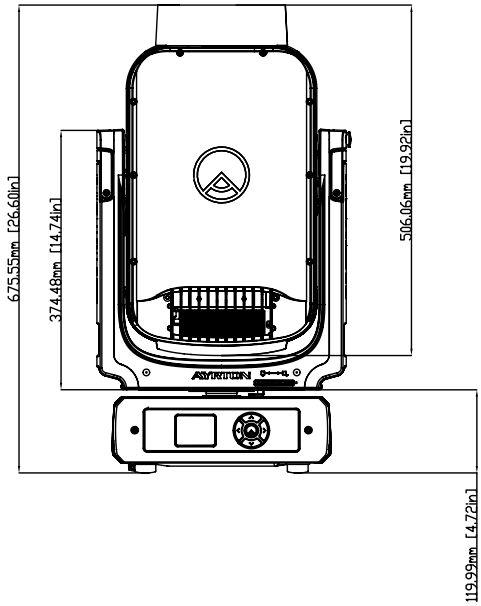

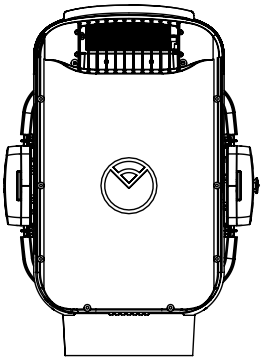

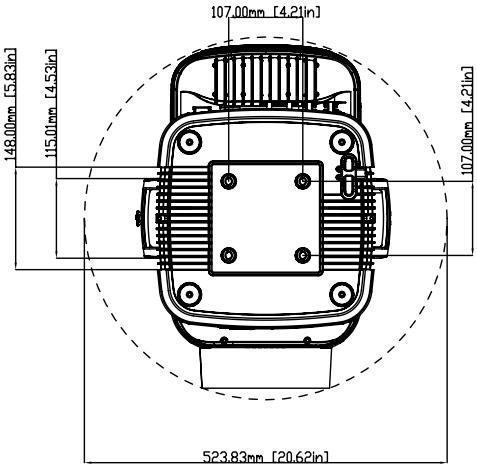

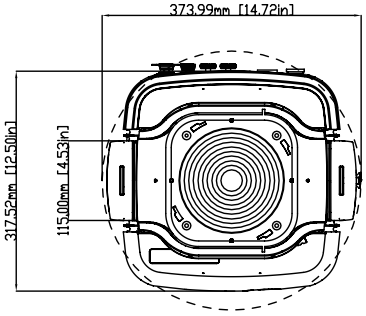

ACCESSORIES DRAWINGS (OPTIONAL)

CONCENTRIC RINGS

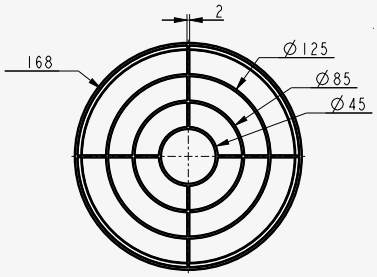

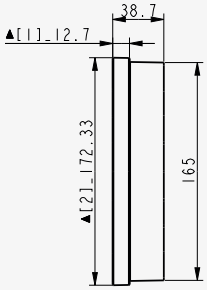

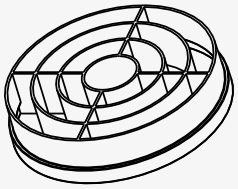

HONEYCOMB LARGE

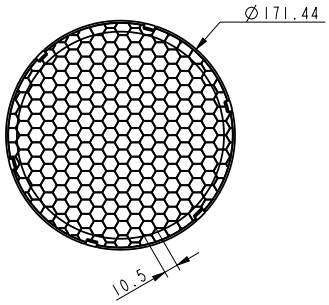

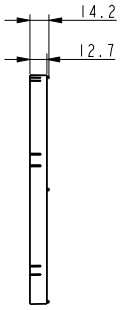

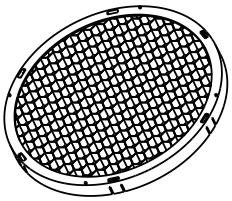

HONEYCOMB SMALL

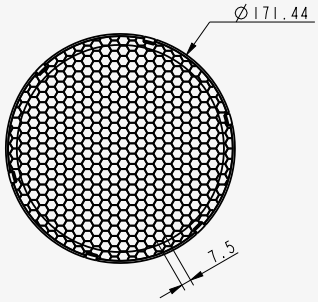

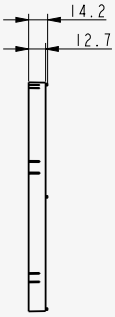

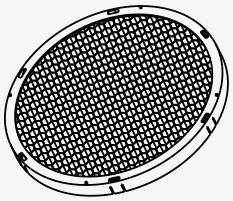

TOP HAT

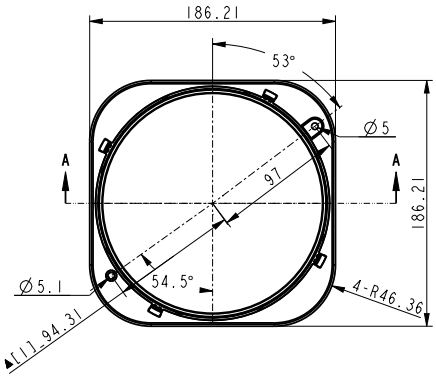

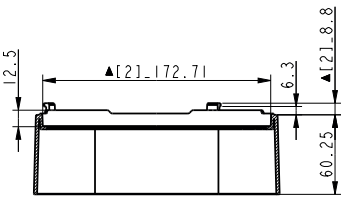

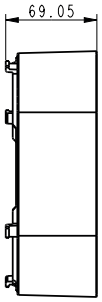

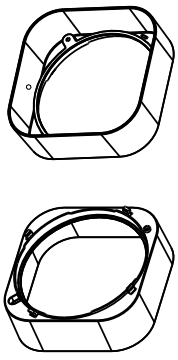

FOAM DRAWINGS

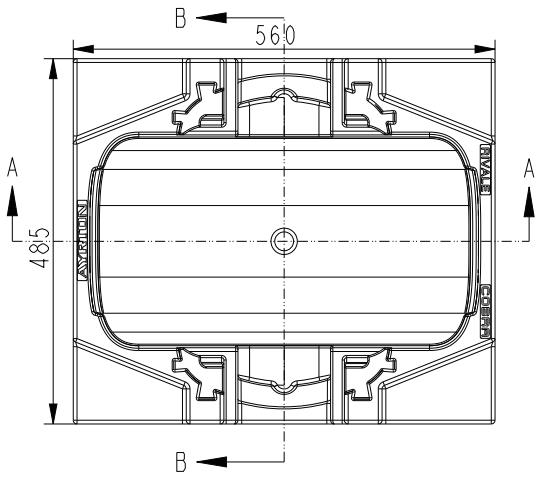

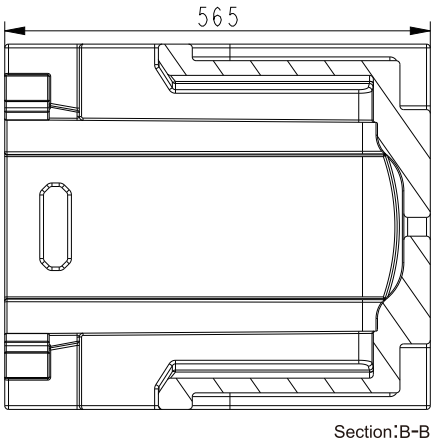

Section:B-B

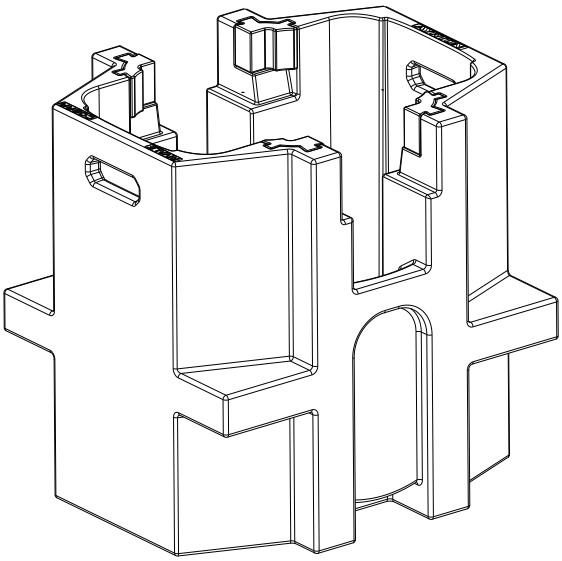

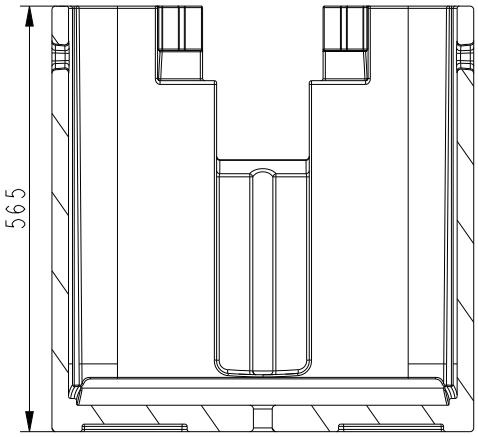

Section:A-A

Dimension tolerance (mm): ± 5
Version: 1.0

⚠ DISCLAIMER

Errors and omissions for all information given in this document are possible. All information is subject to change without prior notice.