USERMANUAL

GENIO BlinderDot



SGM®

Document Revision C | Released 2026-8-12

DIMENSIONS

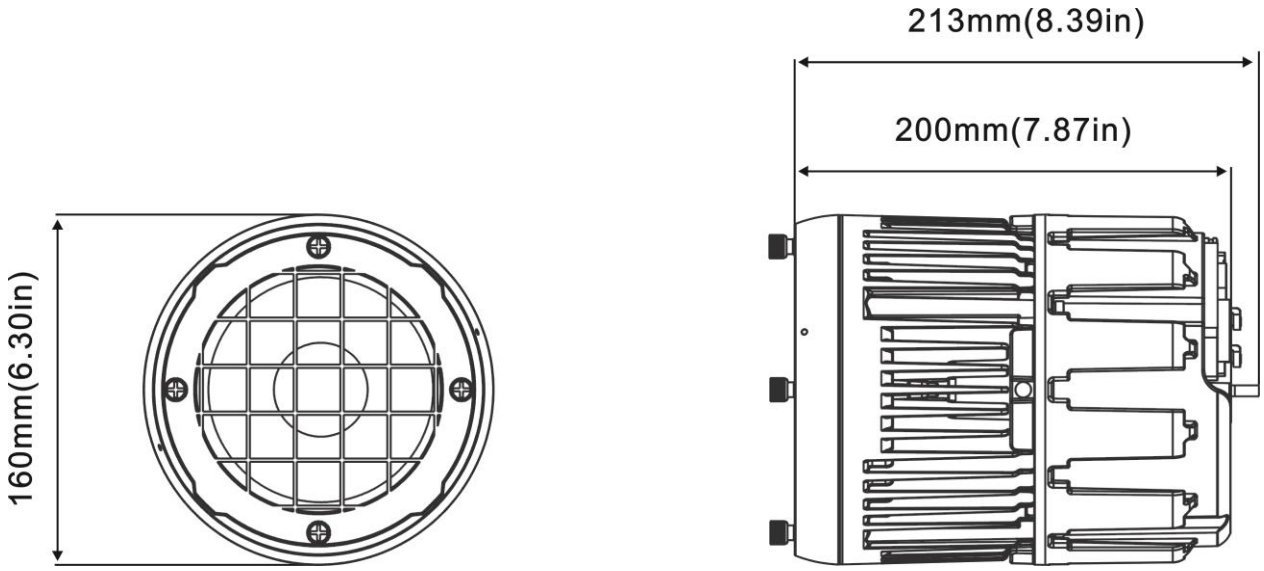

All dimensions in millimetres and inches. Drawing not to scale

This manual covers installation, use, and maintenance of the SGM Series. A digital version is available at www.sgmlighting.com or upon request via support@sgmlighting.com. The information in this document is subject to change without notice. SGM and all affiliated companies disclaim liability for any injury, damage, direct or indirect loss, consequential or economic loss, or any other loss occasioned by the use of, inability to use, or reliance on the information contained in this manual. The SGM logo, the SGM name, and all other trademarks in this document pertaining to SGM services or SGM products are trademarks owned or licensed by SGM, its affiliates, and subsidiaries. This edition applies to firmware version 1.0.0 or later.

English edition © 2024 SGM Lighting ApS®.

CONTENT

2 DIMENSIONS

5 SAFETY INFORMATION

6 BEFORE INSTALLING THIS PRODUCT

7 OVERVIEW

7 POWER SUPPLY
7 LIGHT SOURCE
7 FEATURES
7 CONTROL
7 PHYSICAL
7 THERMAL

8 INSTALLATION GENIO BLINDERDOT

8 IDENTIFICATION AND TERMINOLOGY OF GENIO BLINDERDOT
9 UNPACKING
9 TRANSPORT HANDLING

10 POWER AND DATA

11 ETHERCON/NFC

11 ETHERCON
11 NFC

12 FIXTURE PROPERTIES AND DEFAULT SETTINGS

12 SETTING THE FAN MODE
12 FACTORY DEFAULT

13 RDM

13 SUPPORTED RDM FUNCTIONS
13 SENSORS
13 PID COMMANDS

14 ACCESSORIES (OPTIONAL)

14 GENIO RIGGING CONNECTOR (EXCLUDING THE CLAMP)
15 GENIO CONNECTOR M
16 VERTICAL INSTALLATION:
17 ARRANGEMENTS WITH SPECIAL SHAPES:
18 NORMAL STAND YOKE
19 SLIDING REMOVABLE STAND YOKE
20 SINGLE HEAVY DUTY YOKE
21 DOUBLE HEAVY DUTY YOKE
22 REAR MOUNT BRACKET (TRUSS CLAMP EXCLUDED)
23 8-LEAF BARNDOOR

24 PACKING DIMENSIONS

25 MAINTENANCE

25 FIRMWARE UPDATES
26 SGM VACUUM TEST KIT
26 CLEANING

27 TROUBLESHOOTING

28 FIXTURE AND ACCESSORIES

29 APPROVALS AND CERTIFICATIONS

30 USER NOTES



WARNING! READ THE FOLLOWING SAFETY PRECAUTIONS CAREFULLY BEFORE UNPACKING, INSTALLING, POWERING OR OPERATING THE DEVICE.



SGM fixtures are intended for professional use only. They are not suitable for residential use.
Les fixtures SGM sont impropre à l'usage domestique. Uniquement à usage professionnel.
This product must be installed in accordance with the applicable installation code by a person familiar with the construction and operation of the product and the hazards involved.
Ce produit doit être installé selon le code d'installation pertinent, par une personne qui connaît bien le produit et son fonctionnement ainsi que les risques inhérent.



DANGER! RISK OF ELECTRIC SHOCK DO NOT OPEN THE DEVICE!

- The SGM fixture shall be serviced only by the manufacturer or an authorized service agent.
- Disconnect power before installing or servicing to avoid electrical shock.
- Ensure that the device is electrically connected to earth (ground).
- Do not apply power if the device or mains cable is in any way damaged.
- Do not immerse the fixture in water or liquid.



WARNING! TAKE MEASURES TO PREVENT BURNS AND FIRE!

- Install in a location that prevents accidental contact with the device.
- Install only in a well-ventilated space.
- Install only in accordance with applicable building codes.
- Do not paint, cover, or modify the device, and do not filter or mask the light.
- Keep all flammable materials well away from the device.

ALLOW THE DEVICE TO COOL FOR 15 MINUTES AFTER OPERATION BEFORE TOUCHING IT. THE EXTERIOR SURFACE TEMPERATURE MAY REACH UP TO 75°C (167°F) AT STEADY STATE.



- Take precautions when working at height to prevent injury due to falls.
- For Permanent Outdoor Installations (POI), ensure that the fixture is securely fastened to a load-bearing surface with suitable corrosion-resistant hardware.
- For elevated installations, secure the fixture with suitable safety cables, and always comply with relevant load dimensioning, safety standards, and requirements.

Please visit www.sgmlighting.com for the latest version of this user manual/ safety information leaflet. Due to continuous improvements, the instructions may change without notice. SGM always recommends the latest available firmware version from www.sgmlighting.com.

VISUAL INSPECTION



All users of the SGM fixtures should regularly clean those parts of the fixture directly exposed to the elements, such as the external housing and front glass. Additionally, all owners of the SGM fixtures must periodically check the external housing of the fixture for structural breaks, deterioration, cracked lenses, or loose screws. To ensure proper operation, but also to prevent the risk of potential accidents, do not use the fixture if the lens, housing, or power cables are damaged. If parts of the fixture appear to be missing, cease use immediately and contact SGM support.

WIRING



When installing fixtures in a permanent installation, ensure power and data cable leads are installed as a service loop to an appropriately rated junction box using suitable cable strain reliefs/glands. All installed fixtures must be securely mounted, and service loop appropriately protected for installation location. All electrical wiring and connections should be completed by a qualified electrician.

Separation of field installed power limited circuit (dimming/control) wiring from the branch circuit wiring in the outlet box are to be made in accordance with local and/or national electrical installation codes.

SAFETY PRECAUTIONS



When using electrical equipment, basic safety precautions should always be followed including the following:

- Do not mount near gas or electric heaters.
- Permanently installed equipment should be mounted in locations and at heights where it will not be readily subjected to tampering by unauthorized personnel.
- The use of accessory equipment not recommended by the manufacturer may cause an unsafe condition.
- Do not use this equipment for other than intended use.
- Refer service to qualified personnel or authorized service centers.
- Do not look directly into the beam for long periods of time, when the fixture is on.
- The fixture shall, under no circumstance, be covered with insulating material of any kind.

READ AND FOLLOW ALL SAFETY INSTRUCTIONS.

The GENIO BlinderDot is a 6-color blinder light designed specifically for stage entertainment, playing an indispensable role in performances. Its primary function is to uniformly illuminate the audience area when audience interaction is required, a specific atmosphere needs to be created, or television recording is taking place. At the same time, it ensures that the light does not interfere with the performances on stage. Moreover, it features IP65 protection, making it suitable for use in outdoor environments.

Power supply

- 100-240VAC，50/60Hz
- Power Consumption：400W

Light source

- Light source：1 pcs 350W RGBALW 1800-8500K LED
- LED life：30,000 hours Average Light Source Life*
- Lumen：〉17000lm
- CRI：〉90

FEATURES

- Beam angle：50°，field angle：90°
- 0-100% Dimming
- Simulate the effect of a tungsten filament lamp
- 16-bit Dimming Modes with adjustable settings and various dimming Curves
- AUTO output mode (400W) /constant output mode (300W)/silent mode

Control

- Art-Net-RDM / Art-Net / NFC

Physical

- Dimension(LWH)：213 x 160 x 160mm
- Net Weight：3.5kg
- Housing: die-casting
- IP65

Thermal

- Cooling System: fan inside
- Ambient Temperature (Ta): -20 -45℃

IDENTIFICATION AND TERMINOLOGY OF GENIO BlinderDot

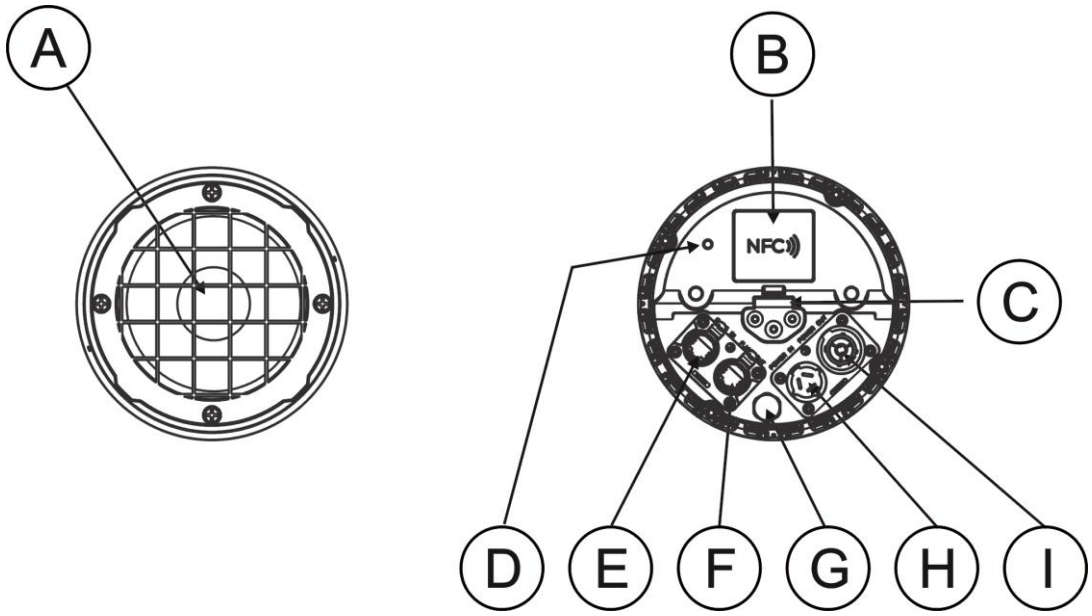

A. 1 x RGBALW LED

B. NFC Tag

C. Hole for the safety rope buckle

D. Indicator light

E. RJ45 In

F. RJ45 Out

G. valve

H. Power In

I. Power Out

Illustrations might vary from received products.
This is subject to change without notice.

UNPACKING

Unpack the device and inspect it to ensure that it has not been damaged during transport and all components are present.

It is recommended to use an external controller to test the normal functioning of this device; during the testing process, configuration and address setting can also be completed. Since the GENIO BlinderDot is an addressable product, configuring it before final installation is much more efficient-especially in cases where the device is located in areas that are difficult to access.

The GENIO BlinderDot is configured using the RDM addressing tool.

WHEN SELECTING A LOCATION FOR THE DEVICE, ENSURE THAT:

- It is situated away from public thoroughfares and protected from contact with people.
- It is not immersed or submerged in water.
- It has adequate ventilation.

TRANSPORT HANDLING

Always use the supplied packaging or suitable flight case for transportation and storage. Never carry the fixture by connected cables or wires.

POWER AND DATA

This device is equipped with a cable that contains both a power cord and a data cable. It is essential to ground this device properly. In an AC power supply system, fuses must be installed to provide protection in the event of a fault. Plug-ins or terminals can be used for temporary programming operations.

The power input required is 100–240 VAC, 50/ 60 Hz AC mains power supply, and draws a maximum of 400 Watts. Power is connected via a “Powercon” type connector. Power plug is as per local code.

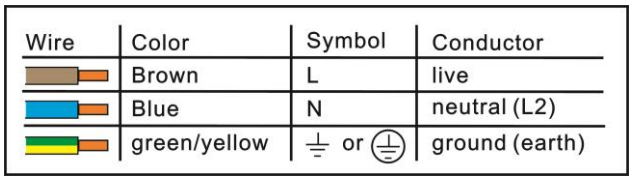

Wire	Color	Symbol	Conductor
	Brown	L	live
	Blue	N	neutral (L2)
	green/yellow	⏚ or ⏚	ground (earth)

- Connect the brown wire to live
- Connect the blue wire to neutral
- Connect the green/yellow wire to ground (earth)

TEMPORARILY CONNECT TO THE DATA IN ORDER TO PERFORM CONFIGURATION SETTINGS

This fixture can be controlled using sACN or Art-Net control devices, and it should be connected using an Ethercon cable.

ETHERCON

When using sACN or Art-Net, this is achieved through Ethernet connectors. These connectors are compatible with all models of Ethercon connectors or RJ45 connectors. These two Ethernet ports can be connected in a daisy-chain topology or directly receive data via Ethernet cables, providing dual-input support for the relevant Ethernet protocols. When the Ethernet ports are connected in a daisy-chain configuration, even if the device itself is powered off, the Ethernet signal can still be transmitted normally.

NFC

The fixture includes a built-in Near Field Communication (NFC) interface, providing compatibility with both Android and iPhone devices for basic configuration and information access. The SGM NFC app can be downloaded from the App Store or Google Play Store.

The NFC tag is positioned on the bottom of the fixture. To access the configuration, open the SGM NFC app and hold your smartphone as close to the tag as possible. Note that the fixture does not need to be powered for the NFC functionality to operate, and the NFC tag remains accessible even when the fixture is stored in the packing box.

SETTING THE FAN MODE

For operating environments where low-noise is a requirement, or where the fixture will be operating at high temperatures, it is possible to adjust the default fan speed by NFC or RDM .

FACTORY DEFAULT

DMX ADDRESS	1
UNIVERSE	0
FAN MODE	Auto
SOURCE PRIORITY	Art-Net
IP ADDRESS	Default address
Use Mode	Standard

SUPPORTED RDM FUNCTIONS

RDM (Remote Device Management) is a protocol enhancement to USITT DMX512 that allows bi-directional communication between the fixtures and the controller over a standard DMX line. This protocol will allow configuration, status monitoring, and management. A RDM controller is needed to get control over the supported parameters. See the tables below for supported RDM functions.

PLEASE NOTE! THE RDM CONTROLLER COMMUNICATES WITH THE FIXTURES TO SHOW ONLY THE AVAILABLE OPTIONS FOR EACH RDM FUNCTION. TABLES ARE SUBJECT TO CHANGE WITHOUT NOTICE.

SENSORS

RDM enables various sensor readouts for remote device monitoring. See the table below for sensors and sensor types.

PLEASE NOTE! THE RDM CONTROLLER COMMUNICATES WITH THE FIXTURES TO SHOW ONLY THE AVAILABLE SENSORS FOR THIS FIXTURE. THE TABLE IS SUBJECT TO CHANGE WITHOUT NOTICE.

NAME	SENSOR TYPE
Led Temperature1	Temperature

NAME	SENSOR TYPE
1UFAN(Led) RPM1	Other
1UFAN(Base) RPM1	Other

PID COMMANDS

PID	ACTIONS ALLOWED	NAME
0x0060	Get	Device Info
0x00F0	Get/Set	DMX Start Address
0x0081	Get	Manufacturer Label
0x00C0	Get	Software Version Label
0x1000	Get/Set	Identify Device
0x00E0	Get/Set	DMX Personality
0x00E1	Get	DMX Personality Description
0x0080	Get	Device Model Description
0x0200	Get	Sensor Definition
0x0201	Get	Sensor Value
0x0120	Get	Slot Info
0x0121	Get	Slot Description
0x0082	Get/Set	Device Label
0x0401	Get	Lamp Hours

PID	ACTIONS ALLOWED	NAME
0x0400	Get	Device Hours
0x0090	Get	Factory Defaults
0x8060	Get	Serial Number
0x8649	Get/Set	Universe
0x863B	Get/Set	Source Priority
0x8625	Get/Set	Fan Mode
0x8647	Get/Set	IP Address
0x8636	Get	Active Error

GENIO Rigging Connector (EXCLUDING THE CLAMP)

The Rigging Connector enables the light fixture to be hung in various ways, including using M10 hexagon screws, quick-lock handles, or direct bolt connections to other devices. The specific steps for installation and disassembly are as follows:

Installation:

- Place the fixture in an appropriate position.
- Loosen the M10 screw on the Rigging Connector and screw the clamp firmly into the M10 threaded hole located in the center of the assembly.
- Insert the Rigging Connector into the designated " mating slot" on the fixture; you will hear a "click" once it is securely in place.

Removal:

- Place the fixture in an appropriate position.
- Gently pull on the unlocking handle, and you can remove the Rigging Connector in the direction of the groove.

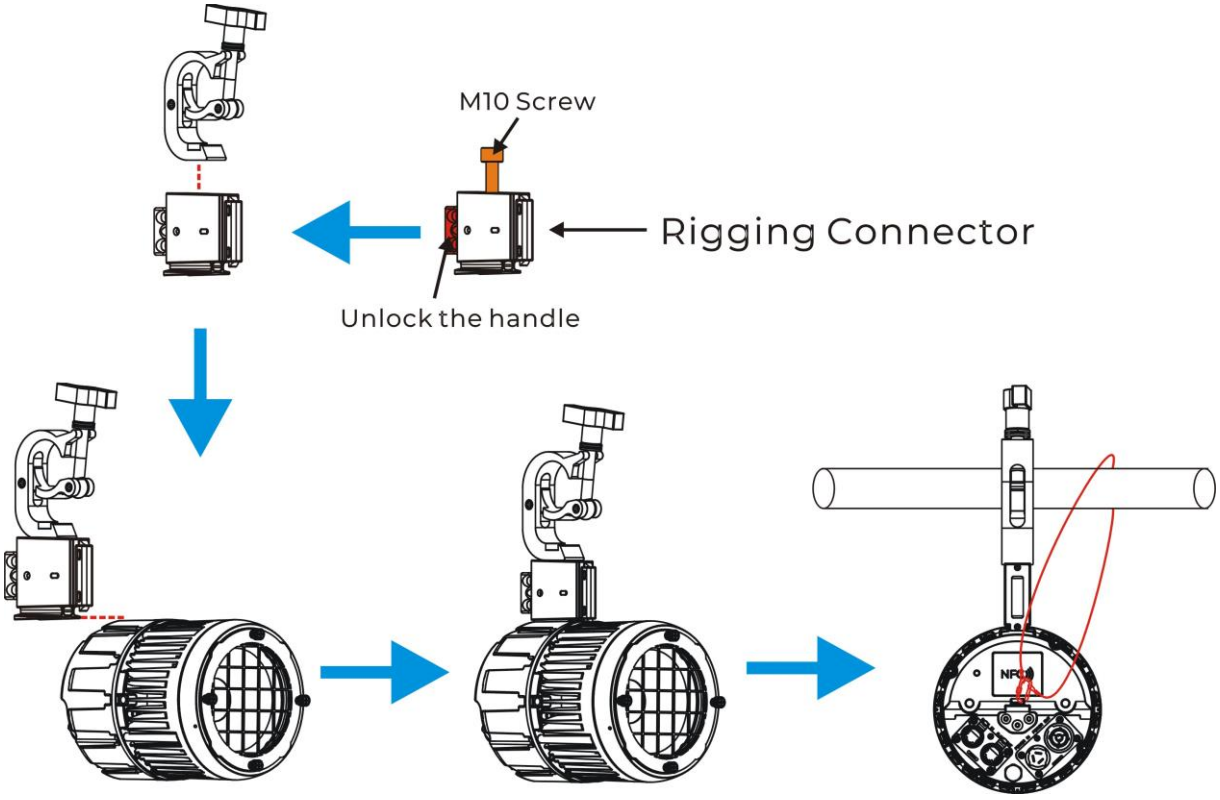

Note: The final step is extremely important. As a secondary safety hanging mechanism, it ensures that the light fixture will not fall if there are any issues with the clamp.

GENIO CONNECTOR M

The connection slots on the fixture are arranged at 30-degree intervals, similar to the spokes of a wheel, allowing for a variety of creative layouts and display designs. Although the connection slots are spaced 30 degrees apart, the fixture can only be connected every 60 degrees; otherwise, physical interference (such as collision or jamming) may occur.

The areas marked in red circles in the diagram represent prohibited connection zones, indicating that the angle between two adjacent connection slots is less than 60 degrees, making it impossible to install the next fixture in those locations.

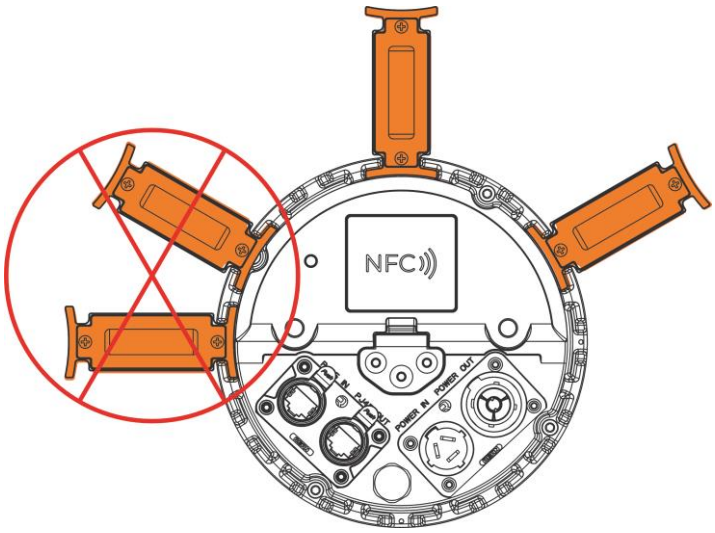

VERTICAL INSTALLATION:

According to the static load-bearing data, the splicing slots of the fixture bodies can support a weight of 61.5 kg. Based on the actual connection scheme, in extreme cases where the assembled fixture fall while hanging, the entire weight will be concentrated at the safety rope buckle of the topmost lamp. Therefore, under the same conditions, a maximum of 17 fixtures can be installed in a vertical row. The specific connection method is as follows:

Rigging Connector +Clamp:

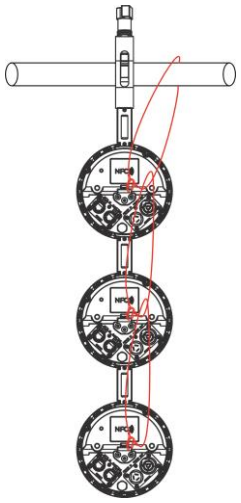

Note: 1、A safety rope is connected to the safety rope connection point at the back of each lamp. For ease of hoisting, the topmost safety rope should be fixed to a secure point. Subsequent safety ropes should all pass around the safety point of the lamp above them, thereby ensuring a step-by-step connection.

2、This type of fixture cannot be transported in a stacked manner, as this would require a truss structure for transportation.

3、Every 3 fixtures apart, the truss must be connected to the back of the fourth fixture using rear mount bracket to prevent swaying, as shown in the figure below.

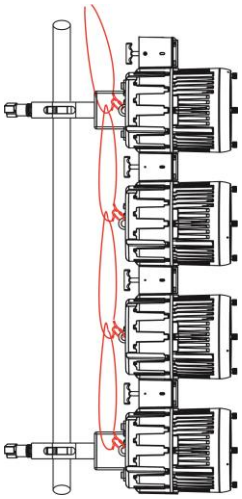

ARRANGEMENTS WITH SPECIAL SHAPES:

Any array consisting of multiple interconnected luminaires must be securely fixed and properly supported to prevent any movement or shaking caused by lateral forces, such as wind, collisions with people, or contact with other objects. The specific connection methods are as follows:

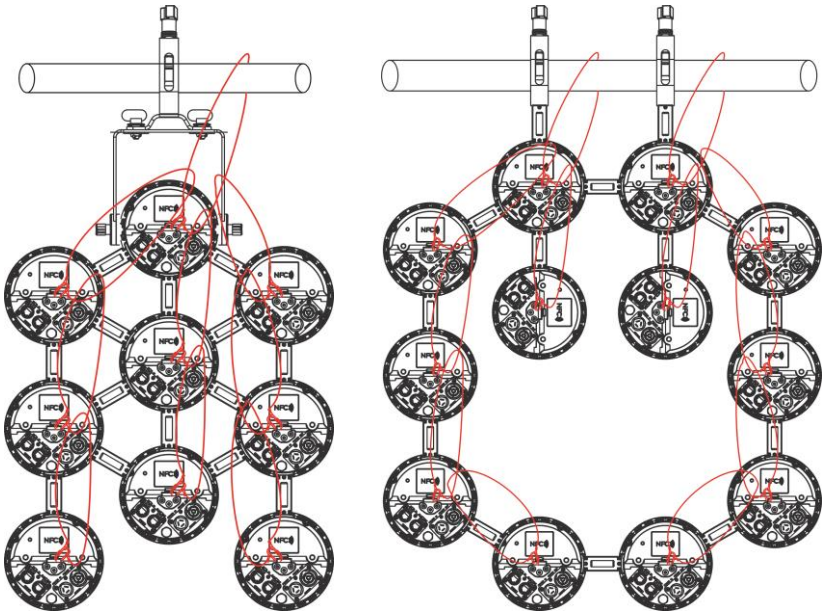

Note: 1、In practical applications, such structures require special attention with regard to stability, in order to prevent any overall displacement or collapse caused by external forces.

2、This type of fixture cannot be transported in a stacked manner, as this would require a truss structure for transportation.

3、Every 3 fixtures apart, the truss must be connected to the back of the fourth fixture using rear mount bracket to prevent swaying, as shown in the figure below.

NORMAL STAND YOKE

Installation:

- Place the fixtures in an appropriate position.

- First, secure the knob inner plate onto the fixture body, making sure the screws on the knob inner plate align with the screw holes on the fixture body.

- Then align the screw holes of the normal stand yoke bracket with those of the inner plate of the knob, and insert the hand-tightening screws before securing them in place.

Removal:

- Unscrew the manual-adjustable screws and remove the normal stand yoke as well as the inner panel of the knob.

Note: This accessory has a maximum load capacity of 9 fixtures.

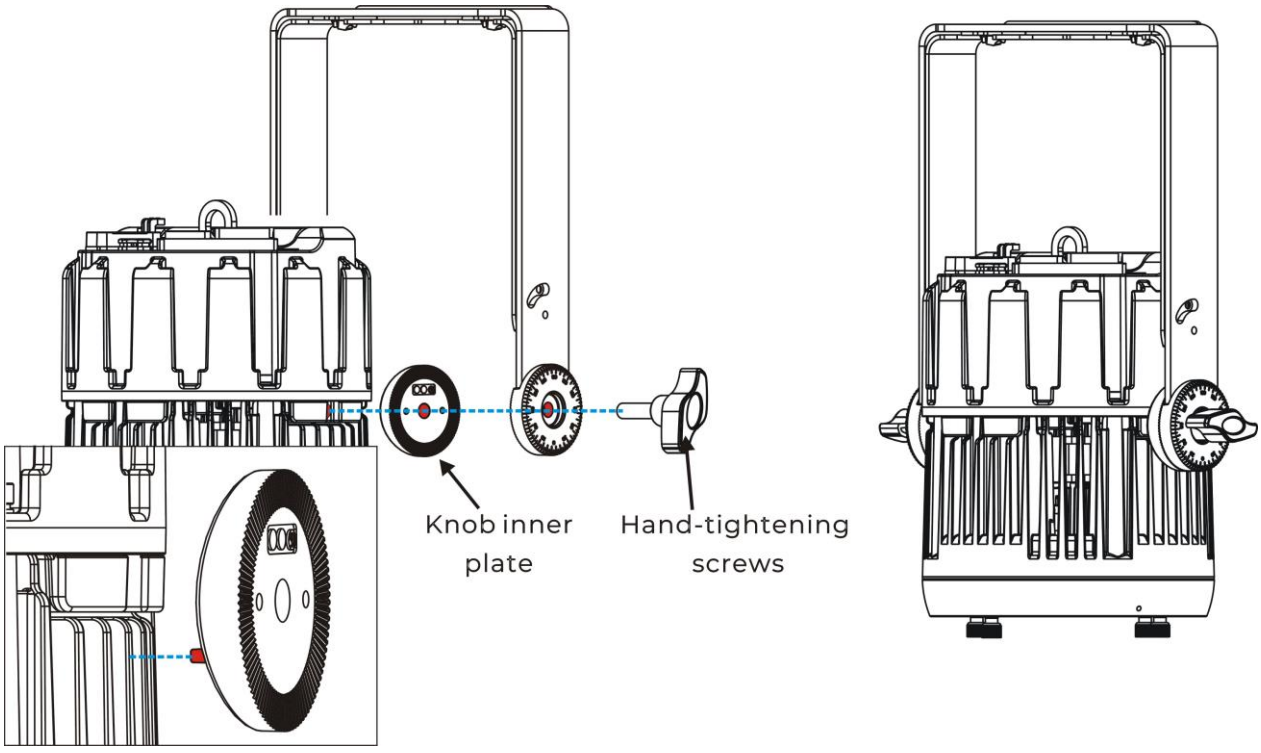

SLIDING REMOVABLE STAND YOKE

Installation:

- Place the fixture in the appropriate position.
- Insert the sliding removable stand yoke into the groove on the fixture body. Once you hear a “click”, the handle is successfully installed.

Removal:

- Place the fixture in the appropriate position.
- Use both hands to separate the unlock the contiguous areas on either side of the handle assembly, and then lift it upward to remove the handle.

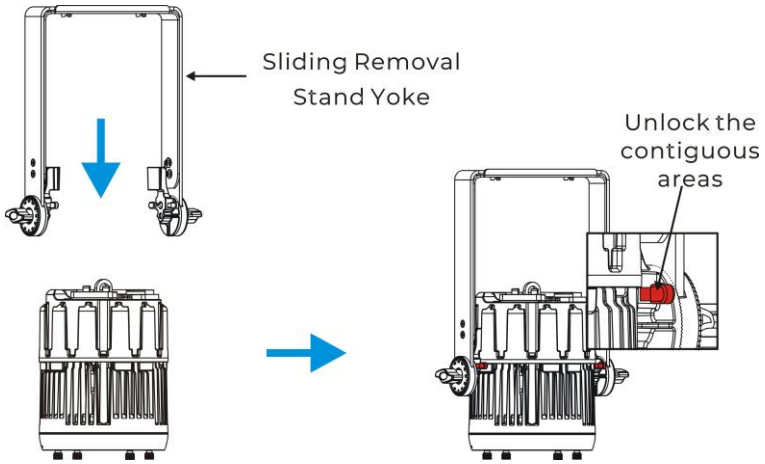

Note: This removable stand yoke is equipped with both an inner handle and an outer handle. Both handles can be rotated to achieve any desired angle for laying the item flat (loosening the two screws on the outer handle to rotate the handle angle), or they can be used in combination with a quick-locking component and a clamp for hanging the item (hanging is only permitted when the light hooks are perpendicular to the light-emitting surface, with a maximum load of 1 fixture; it is forbidden to use the handle parallel to the NFC surface, as shown in the image).

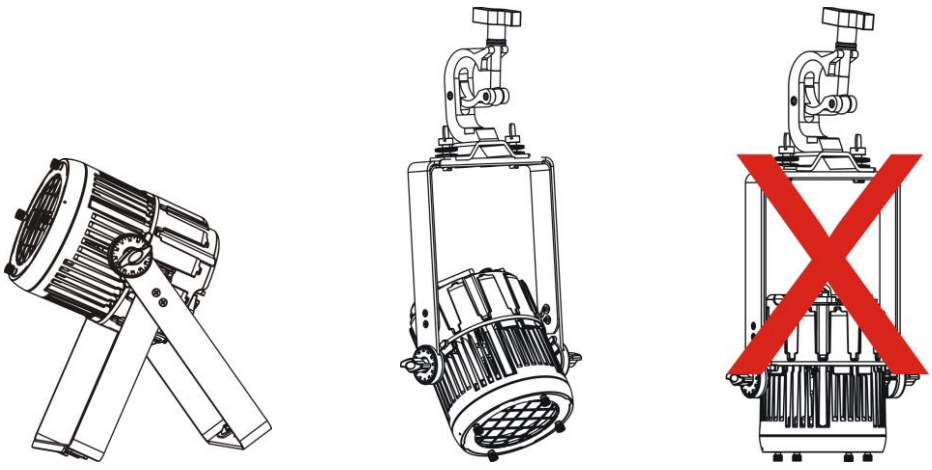

SINGLE HEAVY DUTY YOKE

Installation:

- Place the fixture in an appropriate position.
- First, secure the knob inner plate onto the fixture body, making sure the screws on the knob inner plate align with the screw holes on the fixture body.
- Then align the screw holes of the heavy-duty bracket with those of the inner plate of the knob, and insert the hand-tightening screws before securing them in place.

Removal:

- Unscrew the manual-adjustable screws and remove the single heavy duty yoke as well as the inner panel of the knob.

Note: This accessory has a maximum load capacity of 17 fixtures.

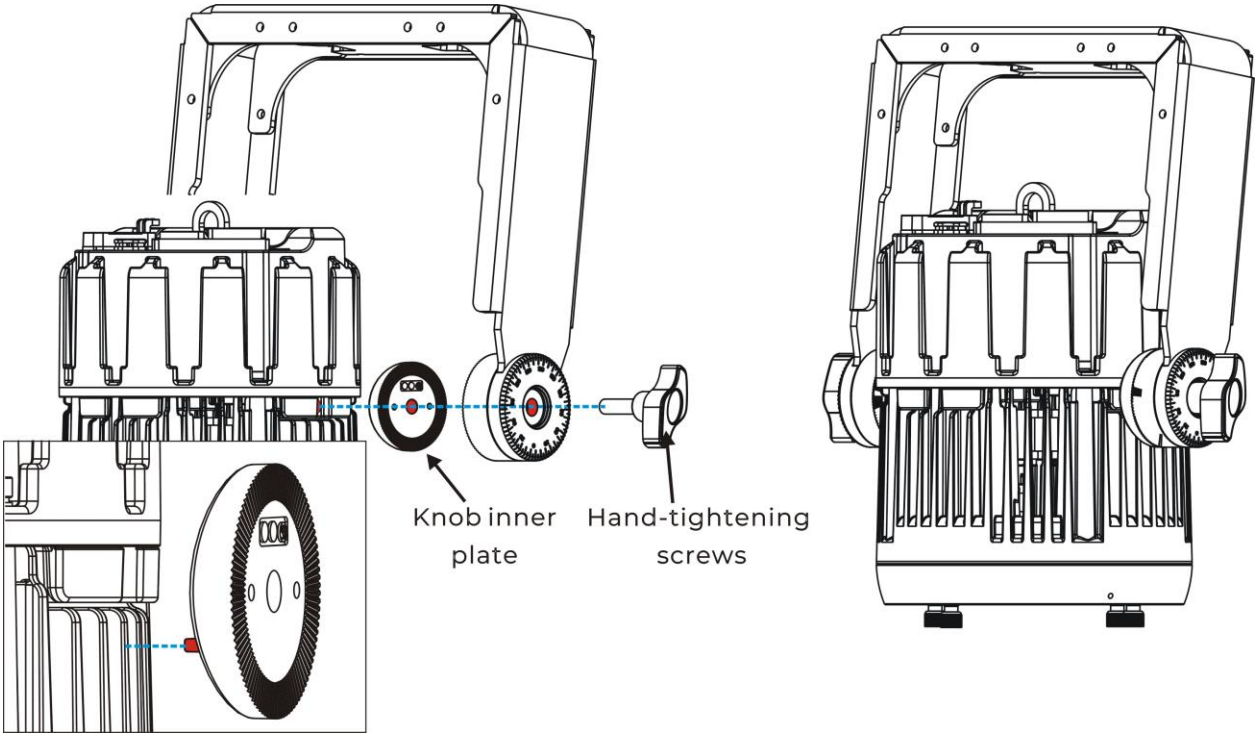

DOUBLE HEAVY DUTY YOKE

This accessory can be used to connect two fixtures. The specific steps for operation are as follows:

Installation:

- Place the 2 fixtures in an appropriate position.
- Use the Connector M to connect the two fixtures together. Make sure that the Connector M direction is aligned with the NFC chip, ensuring they are on the same horizontal plane.
- First, secure the knob inner plate onto the fixture body, making sure the screws on the knob inner plate align with the screw holes on the fixture body.
- Then align the screw holes of the heavy-duty bracket with those of the inner plate of the knob, and insert the hand-tightening screws before securing them in place.

Removal:

- Unscrew the manual-adjustable screws and remove the double heavy duty yoke as well as the inner panel of the knob.
- Gently pull on the unlocking handle, and the Connector M can be removed in the direction of the slot.

Note: This accessory has a maximum load capacity of 16 fixtures with 2 G clmaps

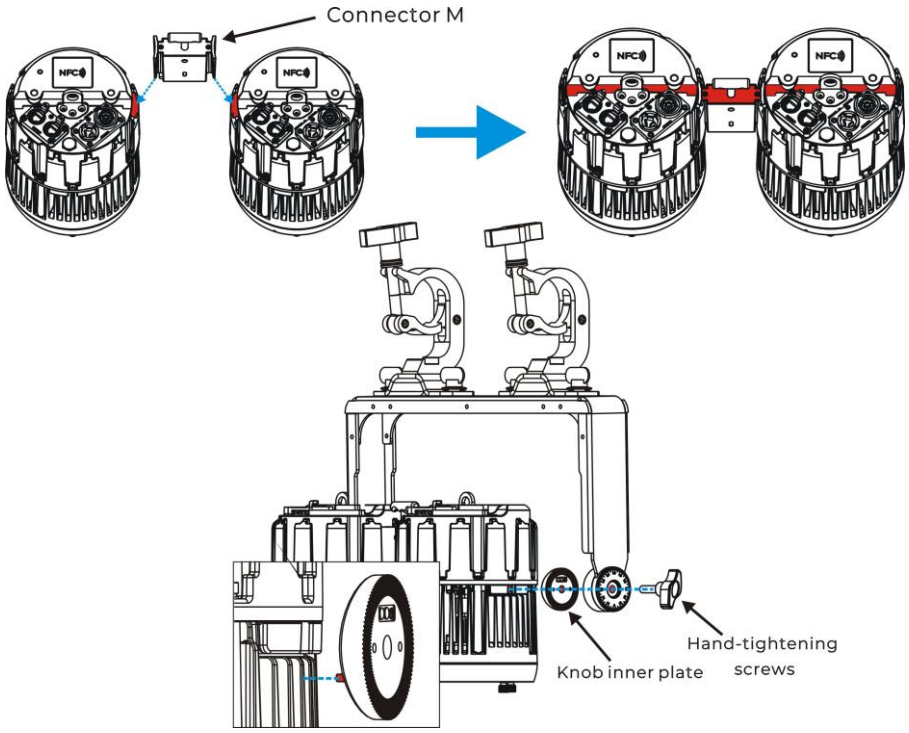

REAR MOUNT BRACKET (TRUSS CLAMP EXCLUDED)

This universal frame can be installed on various types of fixture.

- Place the fixture in the appropriate position.
- Align the two screw holes of the rear mount bracket with the two screw holes located at the bottom of the fixture body, and then secure them using M8 screws.

Note: This accessory is intended for single-fixture hanging use only, or as auxiliary support when multiple fixture are joined. It must not be solely relied upon to connect multiple fixtures.

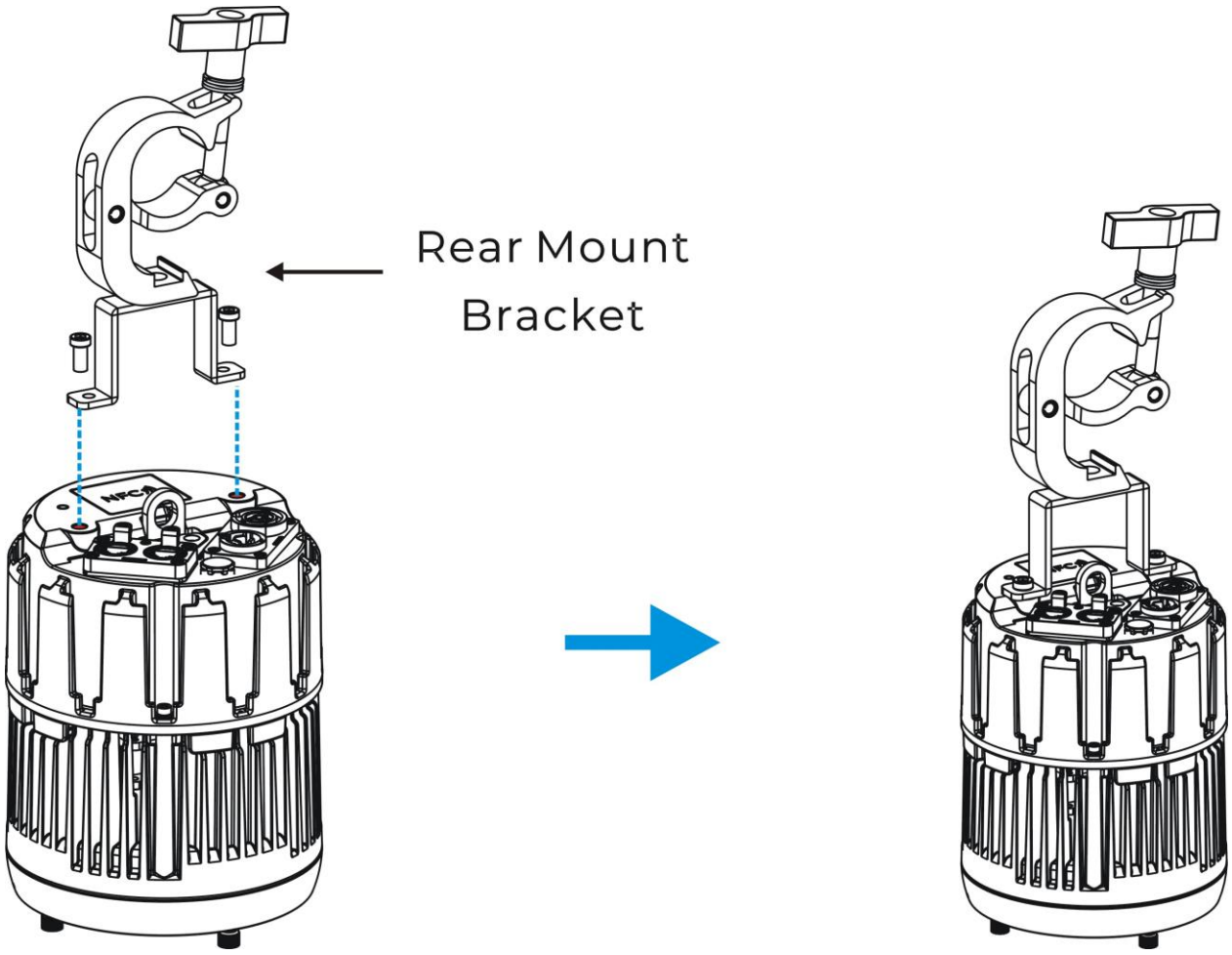

8-LEAF BARNDOOR

This universal frame can be installed on various types of fixture.

Place the fixture in the appropriate position.

- Loose the four thumb screws on the lens and remove the grid plate.
- Align the gel frame holder with the positions of the thumb screw holes and insert it in place. Make sure the rotating strip is positioned on the top, and then tighten the 4 thumb screws.
- Gently pinch both sides of the rotating strip with two fingers to open it. First, insert the gel frame downwards into the second slot of the fixing component, and then insert the 8-leaf barndoor into the first slot in the same direction.
- Secure the rotating strip in place and tighten the thumb screws of the 8-leaf barndoor.

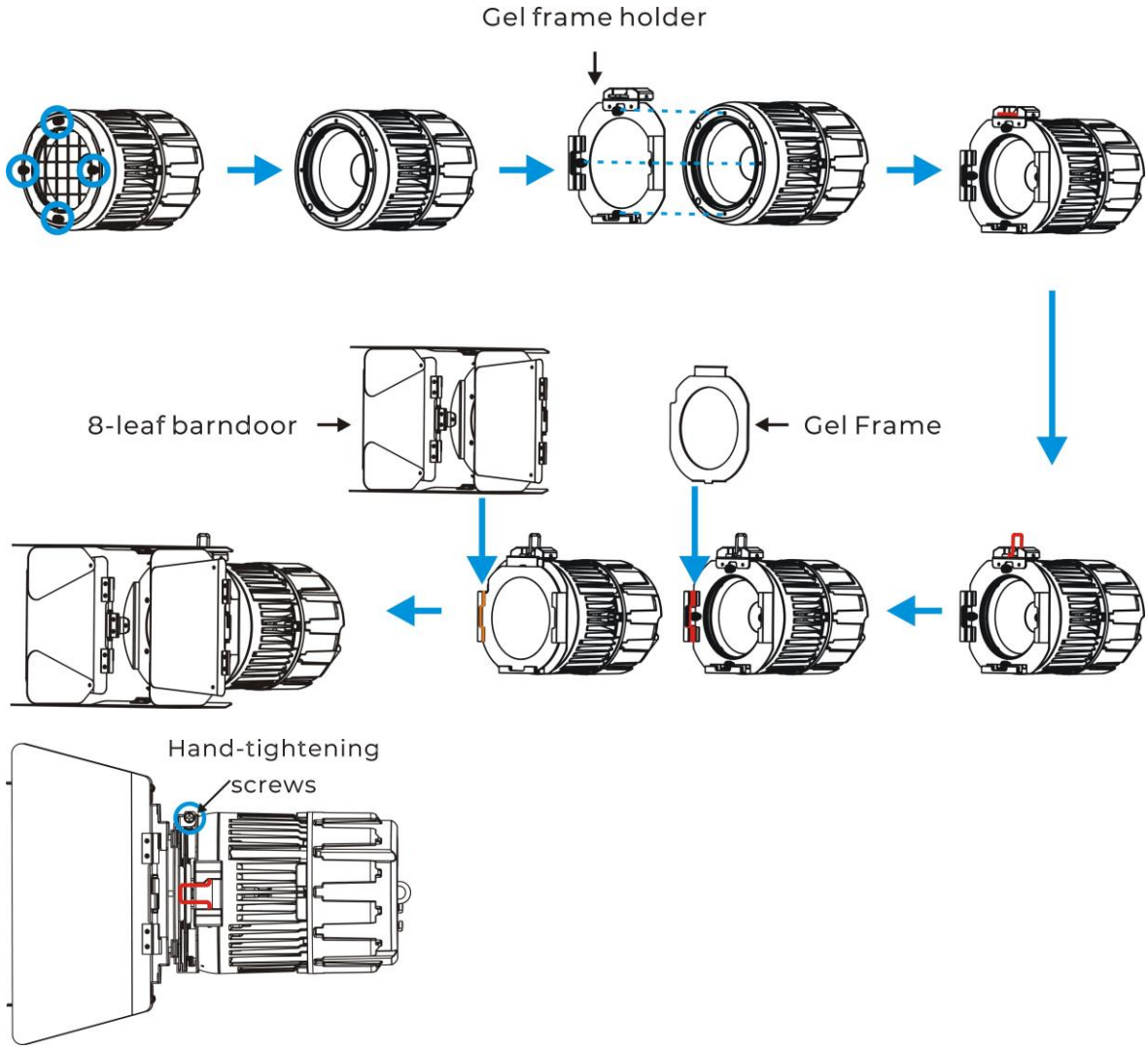

PACKING DIMENSIONS

330x266x277 (Carton packaging)

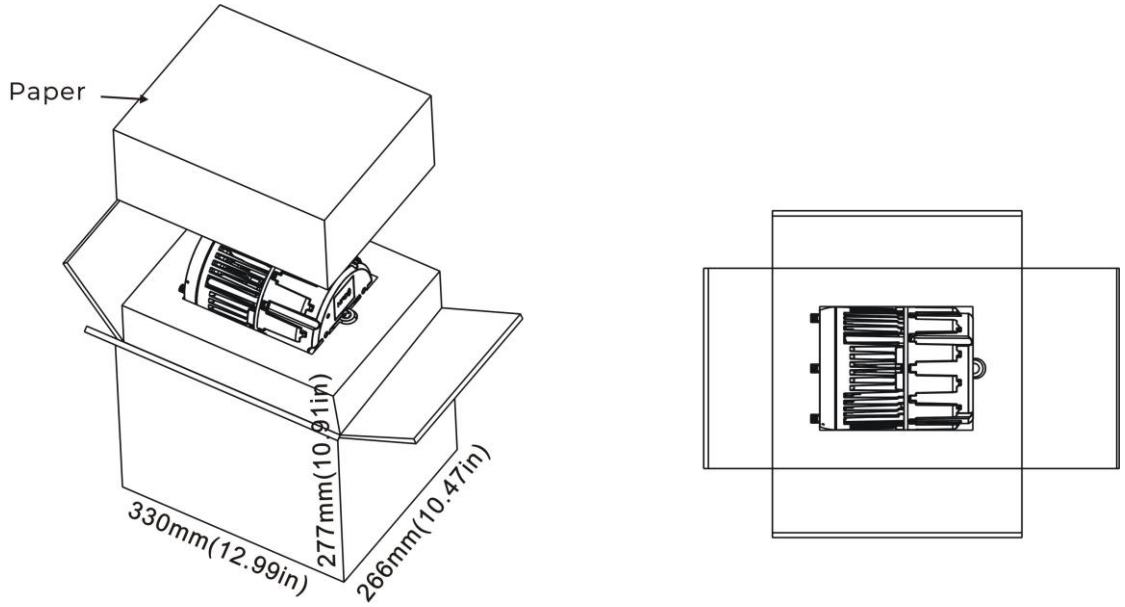

430x200x220 / 451x221x303 (2 in 1 PU + Carton package, containing 1 Connector M + 1 Rigging Connector or contains 2 Connector M.)

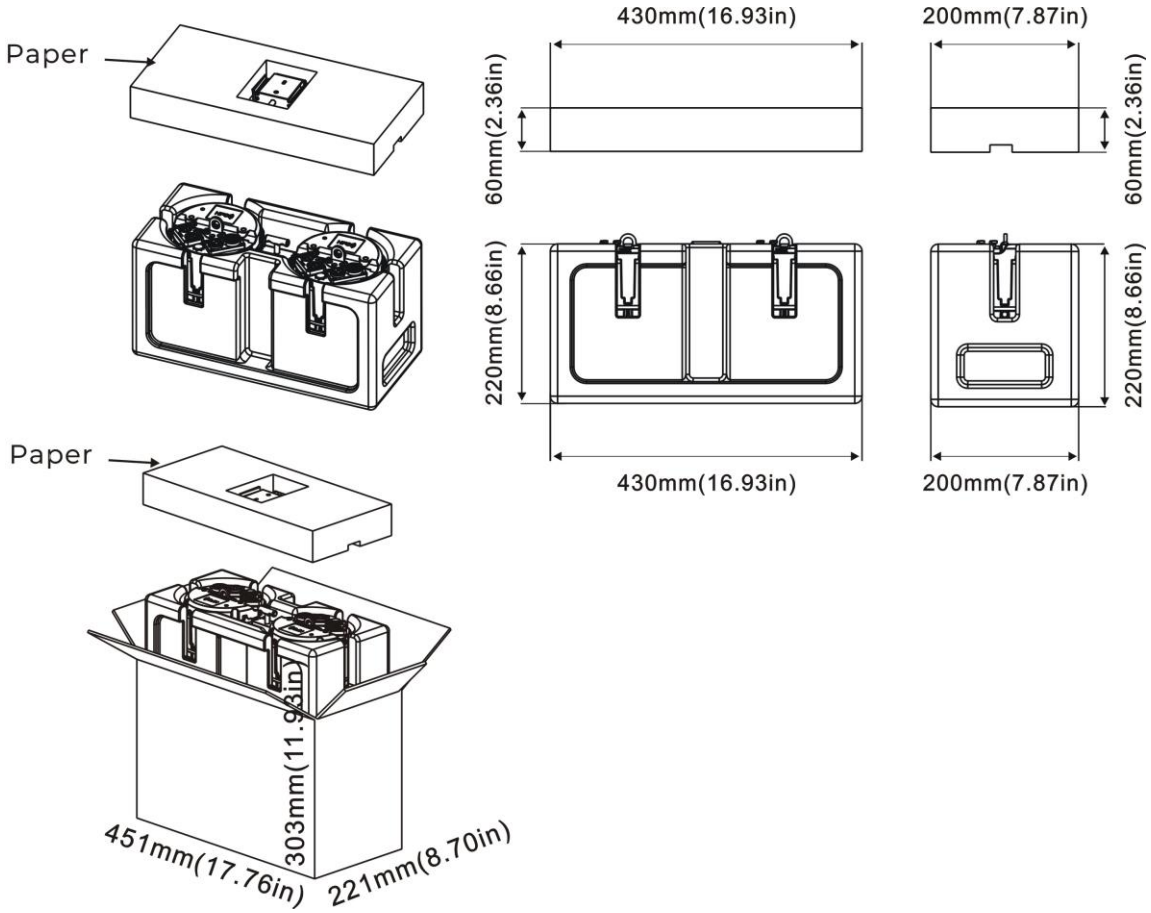

FIRMWARE UPDATES

The latest firmware，manuals and tools are all available for free download a www.sgmlighting.com. The SGM Firmware Tool is used to update firmware：

Fixture firmware can be identified in this ways：

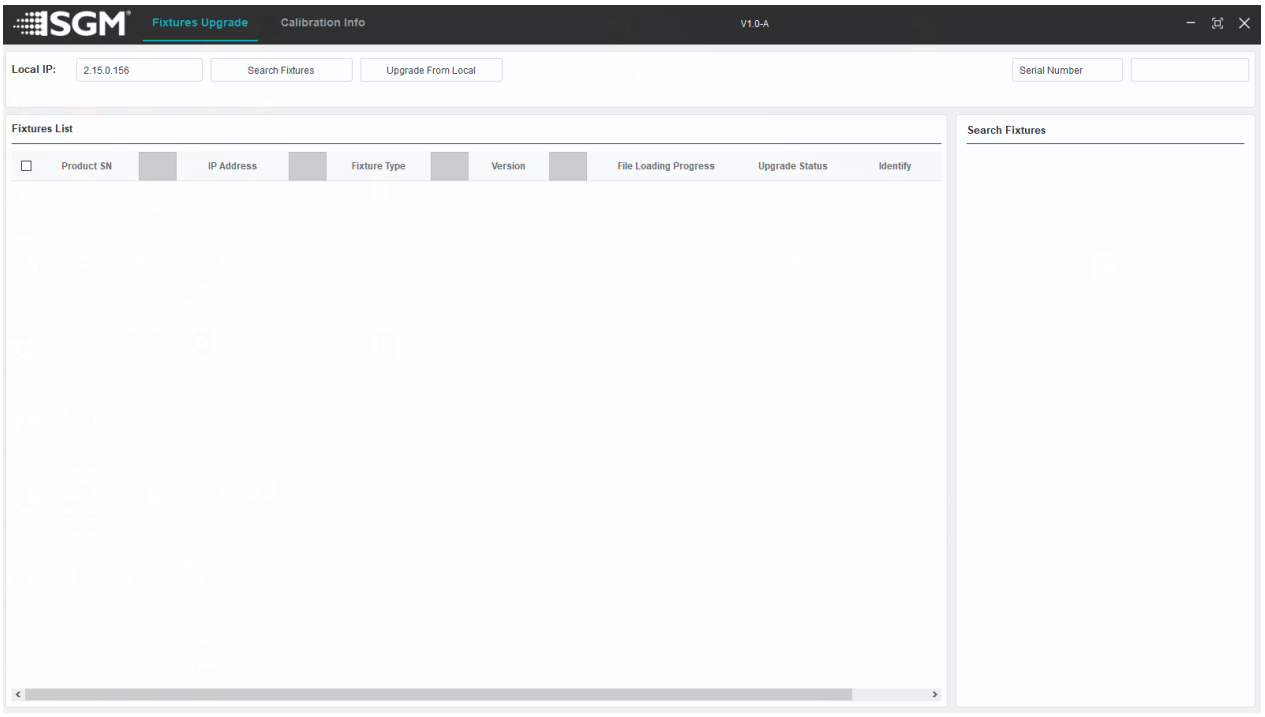

After the fixture is powered on and is working properly, click on SGM Fixture Manager.exe to open the APP upgrade interface “Fixtures Upgrade”. Select the Ethernet IP range of the respective fixture by clicking “Local IP”, and then click “Search Fixtures” to locate the fixtures connected to that IP range. After the search is completed, all relevant information about the connected fixtures will appear in the “Fixtures List”, and on the right side, you will see the progress of the search (ranging from 0% to 100%).

The “Fixtures List” is displayed as follows:

Product SN: The serial number of the fixture;
IP Address: The IP address of the fixture;
Fixture Type: The model name of the fixture;
Version: The software version number of the fixture;
File Loading Progress: The progress of loading the upgrade program onto the external storage chip;
Upgrade Status: The upgrade status of the fixture;
Identify: The command used to identify the fixture device.

SGM VACUUM TEST KIT



The Vacuum Test Kit is an accessory suitable for all SGM IP-rated fixtures, made for testing the IP integrity upon reassembly.

In order to ensure the IP-rating of the fixture, it's highly recommended that the fixture is always vacuum tested after installing or swapping any part that might compromise the IP-rating, e.g., swapping the front lens.

SGM disclaims liability for any damage occasioned by the non-use, or inability to use, the vacuum test kit after reassembling the fixture.

CLEANING

SGM fixtures with IP65 do not need any cleaning procedures inside the fixture. However, cleaning the front lens may be needed to achieve the maximum light output after exposure to dust, sand, or dirt. The exterior housing can also be cleaned to get a better look. To maintain adequate cooling, fans must be cleaned periodically.

Whenever necessary, clean the fixture using a soft cloth dampened with a solution of water and a mild detergent. Do not use products that contain solvents, abrasives, or caustic agents for cleaning, as they can cause damage to hardware, cables, and connectors.

The level of cleaning required will vary greatly depending on the operating environment and installation. Therefore, it is recommended to do frequent check-ups the first few weeks of operation to see how often cleaning is necessary.

PROBLEM	POTENTIAL CAUSE(S)	REMEDIES
Fixture does not respond or appears to be completely dead.	No power to the fixture	Confirm that the power is switched on, confirm that the cables are plugged in.
Fixture suddenly turned off.	Power was turned off.	Check the power supply, switches and breakers
Color is uneven.	The minimum values are out of calibration.	Contact your local SGM dealer or support@ sgmlighting.com.
	The SGM Calibration Data set has been lost.	Contact your local SGM dealer or support@ sgmlighting.com.

The fixture can be used with a variety of accessories.

Contact your local SGM dealer to get the latest pricing and news about available accessories.

PLEASE NOTE! THE LIST BELOW IS SUBJECT TO CHANGE WITHOUT NOTICE.

ORDERING INFORMATION

The ordering information of the GENIO BlinderDot and it's variants can be found on the GENIO BlinderDot product page

ACCESSORIES

GENIO Rigging Connector 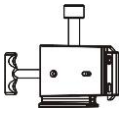 P/N:83063252

GENIO Connector M 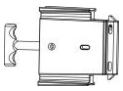 P/N:83063254

NORMAL STAND YOKE  P/N:83063257

SLIDING REMOVABLE STAND YOKE 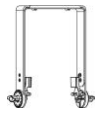 P/N:83063258

SINGLE HEAVY DUTY YOKE  P/N:83063259

DOUBLE HEAVY DUTY YOKE 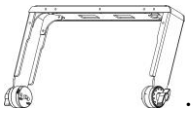 P/N:83063260

REAR MOUNT BRACKET 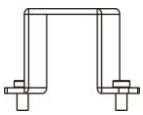 P/N:83063261

8-LEAF BARNDOOR 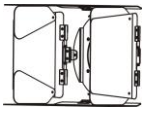 P/N:83063262

Conforms to.....2014/35/EU：Low Voltage Directive

Conforms to.....2014/30/EU：EMC Directive

Conforms to.....2011/65/EU：RoHS2 Directive

Conforms to.....UK SI 2016 No. 1101：The Electric Equipment (Safety) Regulations 2016

Conforms to.....UK SI 2016 No. 1091：Electromagnetic Compatibility Regulations 2016

Conforms to.....UK SI 2012 No. 3032：Restriction of the Use of Certain Hazardous Substances in Electrical and Electronic Equipment Regulations 2012 (RoHS2)

The information in this document is subject to chance without notice.
For the latest information, visit www.sgmlighting.com.

USER NOTES

SGM LIGHTING APS

Sommervej 23

8210 Aarhus V

Denmark

Tel：+45 70 20 74 00

info@sgmlighting.com

www.sgmlighting.com