SLXD5+

Wireless System

Manual for the SLXD5+ wireless system. Contains how-to information, setup instructions, specifications and more.
Version: 1.3 (2026-H)

Table of Contents

SLXD5+ Wireless System **3**

SLX-D+ Overview **3**

Features 3

Compatible Shure Devices 3

In This Guide 3

Additional Resources 3

SLXD5+ Bodypack Receiver **4**

SLXD5+ Menu 5

SLX-D+ Transmitters **6**

SLX-D+ Transmitter Menu 8

Setting the Transmitter RF Power 9

How to Use SLX-D Transmitters with SLX-D+ Receivers **9**

Batteries and Chargers **10**

Battery Types 11

SB903 Battery Chargers 11

Average Charging Times 14

How to Set Up Your SLX-D+ System **15**

Step 1: Set Up SLXD5+ Hardware 15

Step 2: Link Transmitters and Receivers 18

Step 3: Coordinate Frequencies 19

How to Set Up Multiple SLXD5+ Systems **20**

Device Management **21**

Gain Adjustment 21

Locking and Unlocking Devices 21

Interference Management 22

Digital Feedback Reduction (DFR) 22

Audio Encryption 23

Using Wireless Workbench with SLXD5+ **23**

Firmware **23**

Updating Receiver Firmware 24

Updating Transmitter Firmware 24

Optional Accessories **24**

Specifications **26**

Receiver Output Connectors 34

Transmitter Input 35

Frequency Range and Transmitter Output Power **35**

Frequencies for European Countries 36

Safety and Regulatory Information for Wireless Products **36**

Explanation of Symbols 36

Important Safety Instructions 36

Safety and Regulatory Information for Battery Chargers **37**

Safety Information for Batteries **38**

Storing Batteries 38

Important Product Regulatory Information **39**

Regulatory Information for Class B EMC Products 39

Regulatory Information for Wireless Products 41

Environmental Regulatory Information 43

Battery Regulatory Information 44

Certifications **44**

Regulatory Model Number (RMN) 44

FCC / IC ID 45

Energy Efficiency 45

SLXD5+ Wireless System

SLX-D+ Overview

SLX-D+ delivers streamlined, automated management that adjusts to confidently handle live performance, installation, location sound, and rental provider needs.

Portable receiver systems are ideal for on-camera cold shoe use or audio bag applications. SLXD5+ features multi-mic mode to securely monitor and manage complex multi-channel configurations, patented digital feedback reduction software, and secure audio encryption. With ShowLink® Ease, transmitter parameters can be adjusted remotely from the linked receiver without needing to resync devices.

Receivers operate over 138 MHz wideband range, or 44 MHz when used with legacy SLX-D transmitters. Transmitters run up to 8 hours using 2 AA batteries, or add Shure SB903 rechargeable batteries and charger accessories. Portable receivers operate up to 5.5 hours. SLX-D+ provides >118 dB dynamic range and stable, efficient RF transmission for a selection of handheld, lavalier, and headset microphones.

Features

- Transparent 24-bit digital audio
- >118 dB dynamic range
- 138 MHz wideband range (region dependent)
- Monitor and control receiver and transmitter parameters with Wireless Workbench® desktop, or remotely with the Wireless Workbench Mobile app
- Remote control and management of transmitters linked to receivers via ShowLink Ease
- Patented Shure digital feedback reduction (DFR) software
- AES-256 encryption

Compatible Shure Devices

Your wireless system is available in multiple configurations of transmitters, receivers, and microphones to meet your specific needs. For a full list of compatible devices you can use with your SLX-D+ system, visit shure.com or contact your local sales representative.

In This Guide

This guide contains how-to instructions and specifications for the following SLX-D+ wireless system devices:

- **SLXD5+ Bodypack Receiver**
- **SLX-D+ Transmitters*:** SLXD1+ Bodypack Transmitter, SLXD2+ Handheld Transmitter, SLXD3+ Plug-On Transmitter
- **Power Sources:** SB903 Rechargeable Li-Ion Battery, SBC-DC-903 DC Adapter Battery Eliminator
- **Chargers:** SBC10-903 Single-Bay Charger, SBC203 Dual-Bay Charger, SBC80-903 Cradle Charger

***SLXD5+ is also compatible with legacy SLX-D transmitters. See **How to Use SLX-D Transmitters with SLX-D+ Receivers** for more information.

Additional Resources

- SLX-D+ how-to videos
- SLXD4+/SLXD4D+ user guide

- SLXD4Q+ user guide
- Legacy SLX-D user guide
- Wireless Workbench Mobile user guide

SLXD5+ Bodypack Receiver

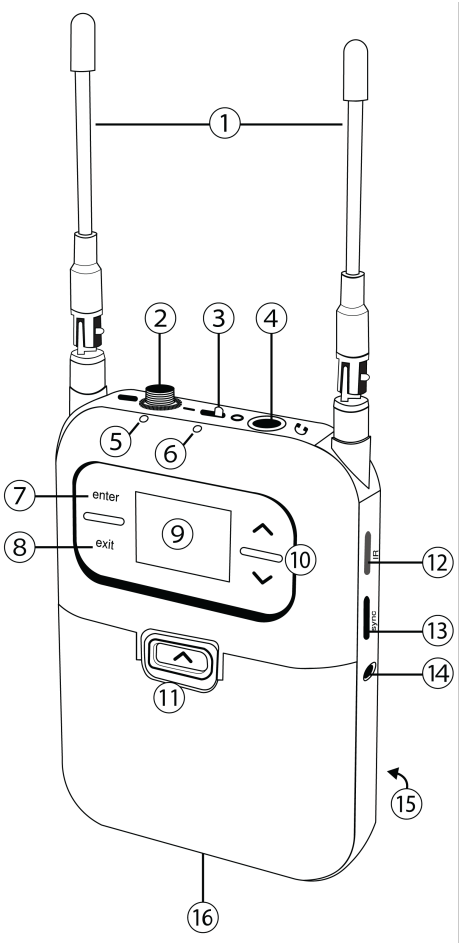

1. **Antennas:** Dual integrated ¼-wave receiver antennas.
2. **⅛" (3.5 mm) camera audio output:** Balanced (Mono) and Dual Mono output modes available.
3. **Power switch:** Powers receiver on or off.
4. **⅛" (3.5 mm) headphone output:** Headphone monitoring output.
5. **RF LED:** Illuminates blue when receiving RF signal from a linked transmitter.
6. **Power LED:**
   - Green: Ready for use
   - Red: Low battery
   - Yellow:
     Flashing = Charging
     Solid = Error, or unit is powered by external power source
7. **Enter button:** Press to confirm the current selection.
8. **Exit button:** Press to cancel and exit the current operation.
9. **Display:** Shows menu options, receiver settings, and transmitter settings.
10. **Up/down buttons:** Change menu parameters, or set as volume controls in the `Device` > `Buttons` `Control` menu.

11. **Battery door latch:** Push up to access battery compartment.
12. **IR port:** Align with a transmitter IR port to link devices; align with another portable receiver IR port to share frequency lists using multi-mic mode.
13. **Sync button:** Press to activate IR sync.
14. **Belt clip mounting holes:** Insert belt clip prongs to attach; push clip towards front panel to remove.
15. **Tripod connector:** Standard ¼" internally threaded connector for included non-conductive camera shoe adapter, or tripod mounting.
16. **USB-C port:** Connect USB-C cable to power on, charge, or update firmware.

SLXD5+ Accessories

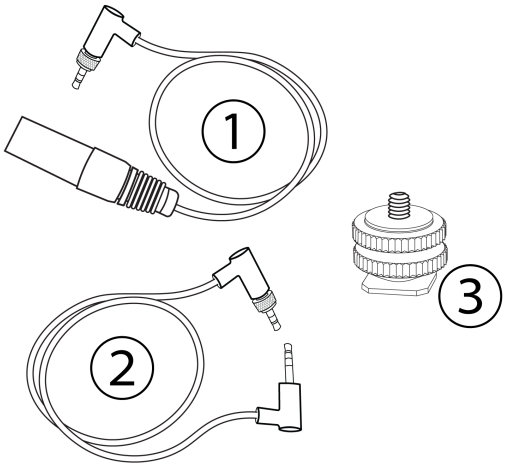

1. Locking 3.5 mm-to-XLR cable (18")
2. Locking 3.5 mm audio extender cable (16")
3. Standard ¼" thread non-conductive camera shoe adapter

Note: *Use this adapter to prevent ground loop noise.*

SLXD5+ Menu

The receiver has individual menu screens for setup and configuration. To access the menu options from the home screen, press the enter button. Use the arrow keys to navigate menu screens. Push enter to confirm your selection, or push exit to return to the previous screen.

SLXD5+ has the following menu screens:

- **Frequency**
  - **Manual Setup**: Manually tune the receiver to a desired frequency.
  - **Channel Scan**: Use the arrow keys to change the selected group as needed, or press enter to automatically scan for available channels within the selected group.
  - **Group Scan**: Receiver automatically scans for the group with the most available channels, if applicable. Some bands consist of only a single group. RF performance is the same in single-group bands as in bands that support multiple groups.
  - **RF Band**: Change the receiver band to match your legacy narrowband transmitter.
  - **Interference**: Set the interference management mode to determine how the receiver responds to interference. See Interference Management for more information.
- **Audio Out**
  - **Audio Out**: Select Balanced (Mono) for XLR devices, Dual Mono for 3.5 mm devices, or adjust gain.
  - **Headphone**: Adjust headphone gain.
  - **Mic/Line**: Switch between output levels.

    - **Feedback Reduction**: Enable feedback reduction per channel to detect feedback and deploy filters that reduce feedback frequencies. See Digital Feedback Reduction (DFR) for more information.
    - **Encryption**: Enable audio encryption to ensure secure audio transmission between transmitters and receivers. See Audio Encryption for more information.
- **Channel Name**: Customize the channel name.
- **Device**
    - **App Connection**: Enable app control, enter pairing mode, and view connected mobile devices. See Using Wireless Workbench with SLXD5+ for more information.
    - **Device Lock**: Set receiver lock status.
    - **Device Preset**: Save current receiver settings or restore last saved settings.
    - **Battery**: To ensure accurate battery metering, set the battery type to match the installed battery. This menu is not selectable when Shure rechargeable batteries are installed.
    - **Buttons Control**: Choose how the up/down buttons function when on the home screen. Audio Out changes audio output gain, and Headphone changes headphone volume.
    - **Display**: Set the OLED display timeout.
    - **Tone Generator**: Turn the continuous test tone on or off, and set volume in dB.
    - **Factory Reset**: Restore all settings to factory default following a system reboot.
    - **About**: Display firmware version and serial number.
- **TX** (Transmitter Settings)
    - **Tx Remote Control**: Identify linked transmitter by flashing transmitter LEDs and edit transmitter properties in real time.
    - **Unlink**: Unlink the transmitter from a receiver channel.
    - **Tx FW Update**: Update transmitter firmware using IR sync or ShowLink Ease.
    - **Tx Presets**: Change transmitter presets and apply after IR sync.
    - **Tx Factory Reset**: Reboot the transmitter and restore all settings to factory default.
- **Multi-Mic Mode**: Create shared frequency lists and monitor multiple transmitters in multi-receiver systems. See Multi-Mic Mode for more information.
- **Help**: Provides a QR code link to additional materials.

SLX-D+ Transmitters

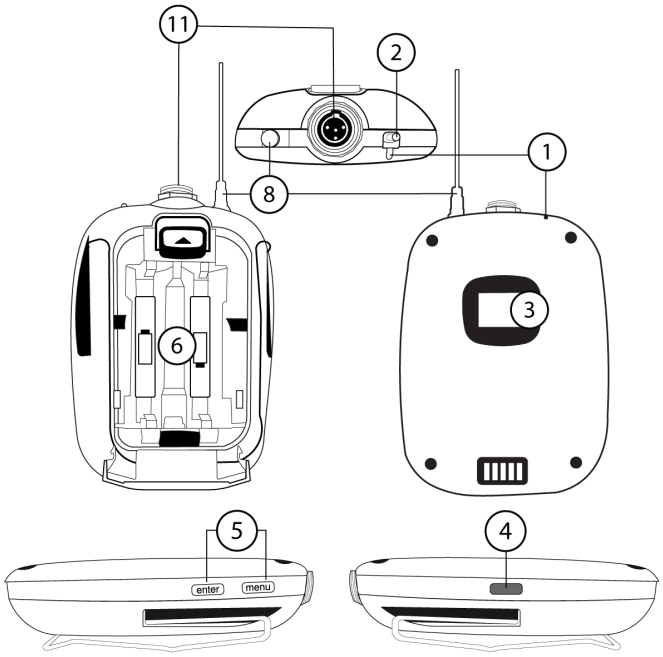

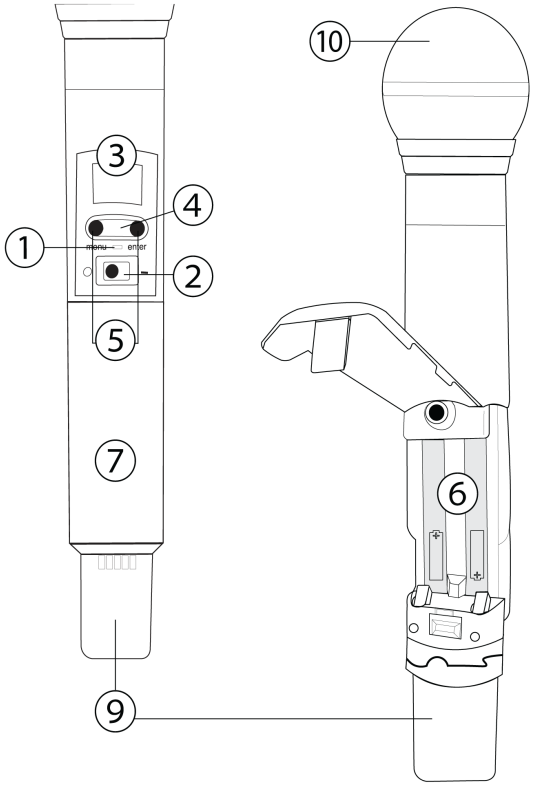

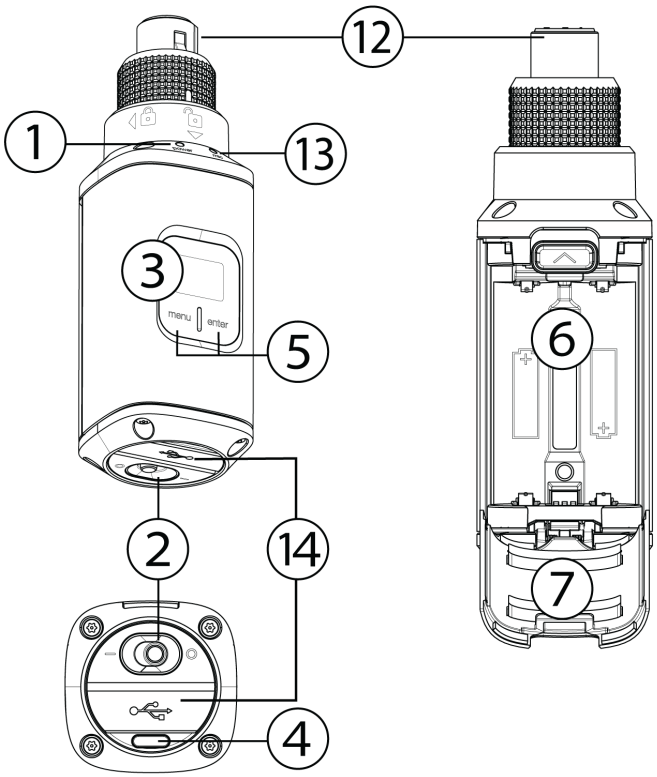

1. **Power LED:**
   - Green = Unit is powered on
   - Red = Low battery
2. **On/off switch:** Powers the transmitter on or off.
3. **Display:** View menu screens and settings. Press any control button to activate the display.
4. **IR port:** Align with a receiver IR port to link devices.
5. **Menu navigation buttons:**
   - menu = Navigate between menu screens
   - enter = Confirm and save parameter changes
6. **Battery compartment:** Requires 2 AA batteries or a Shure SB903 rechargeable battery.
7. **Battery cover:** Protects battery compartment during use.
8. **Bodypack antenna:** For RF signal transmission.
9. **Handheld integrated antenna:** For RF signal transmission.
10. **Microphone cartridge:** Interchangeable with a variety of Shure cartridges.
11. **TA4M input port:** Connects to a 4-Pin Mini Connector (TA4F) microphone or instrument cable.
12. **Locking XLR connector:** Connection point for wired microphones, cables, boom poles, and more. To release the XLR connector, turn the ring counterclockwise and push in.
13. **Microphone LED:** Indicates audio input from connected microphone, regardless of receiver status.
14. **USB-C port:** Connect USB-C cable to power on or charge transmitter.

SLX-D+ Transmitter Menu

Transmitters have individual menu screens for setting up and adjusting the transmitter. To access the menu options from the home screen, press the menu button. Each additional press of the menu button advances to the next menu screen. Use the enter button to select and confirm options on the active menu screen.

SLX-D+ transmitters have the following menu screens:

- **Home Screen**: Use the enter button to select a home screen display.

- **Mic Offset**: Match audio levels between two transmitters used in a combo system. Range is 0 to 21 dB (3 dB increments).
- **RF Power**: Select an RF power setting. See Setting the Transmitter RF Power for more information.
- **High Pass**: Turn the high pass filter on or off.
- **Battery**: To ensure accurate battery metering, set the battery type to match the installed AA battery type. This menu is not selectable when Shure rechargeable batteries are installed.
- **Lock Type**: Determine auto lock behavior. See Locking and Unlocking Devices for more information.
- **Auto Lock**: Turn the transmitter auto lock on or off. See Locking and Unlocking Devices for more information.
- **Phantom Power***: Select a phantom power setting.
- **Pad/Boost***: Select input pad or boost to avoid overloading the audio input, or increase low-output audio sources.
- **About**: Displays the firmware, hardware, and band information.

*SLXD3+ only

Setting the Transmitter RF Power

The transmitter offers multiple RF power settings which determine the transmitter range. Use the low setting when the transmitter and receiver are in close proximity.

- 1 mW (Low)
- 10 mW (High)
- 30 mW (SLXD3+ only)

To change the transmitter RF power:

1. Go to the transmitter RF power menu.
2. Use the menu button to select an RF power setting.
3. Press enter to save.

How to Use SLX-D Transmitters with SLX-D+ Receivers

You can tune a wideband SLX-D+ receiver frequency band to match a compatible legacy SLX-D transmitter frequency band. Change the frequency band before setting up your system, or while IR syncing devices.

Before you begin, **confirm all devices are operating the latest firmware.**

To change the SLX-D+ receiver frequency band:

1. Go to `Frequency` > `RF Band`.
2. Select the band that matches your transmitter.

   Note: *All receiver channels will change to the same band. Additional transmitters must all be in the same band.*

If you don't change the receiver frequency band before setting up your system, the receiver will prompt you to change the band while IR syncing devices. To change the receiver frequency band during IR sync:

1. Align the infrared (IR) ports on the transmitter and receiver.
2. Push the sync button.
3. The receiver will detect a band mismatch and open the RF Band menu automatically. Push enter to apply the suggested change.

   Note: *All receiver channels will change to the same band. Additional transmitters must all be in the same band.*

Compatible Frequency Bands for SLX-D+ and SLX-D Devices*

To know what frequency band your devices operate in, find the frequency bands on the sticker in the battery compartment.

Region	SLX-D+ Band	Compatible SLX-D Band
USA, Canada, Latin America	G57	G58 H55 J52
Europe, MEASA	G65	G59 H56 J53
Europe	K55	K59 L56
Europe	S50	
Israel	G60	
China	L60	L58 L59
China	G60	
Hong Kong	G54	G61
Taiwan	K60	L58
South Korea	G64	
South Korea	X51	
Japan	JB	
Southeast Asia	G66	H57
Thailand	M55	
Australia, New Zealand	H58	H57 J54

***IMPORTANT:** Bands across regions are not compatible.

Legacy SLX-D Receiver Systems

If you are using a legacy SLX-D receiver, you can use SLX-D and SLX-D+ transmitters at the same time. There won't be ShowLink Ease capability. When SLX-D receivers and SLX-D+ transmitters are linked, devices show Success! and then Band Mismatch! messages on the displays.

For more information on setting up legacy SLX-D receiver systems, go to the SLX-D user guide.

Batteries and Chargers

Battery Types

Use 2 AA batteries or a Shure SB903 rechargeable battery to power SLXD5+ receivers and SLX-D+ transmitters.

Setting the AA Battery Type

To ensure accurate display of device runtime, set the battery type in the device menu to match the installed AA battery type. If a Shure rechargeable battery is installed, selecting a battery type is not necessary and the battery type menu will not be selectable.

To set the battery type:

1. Go to the Battery menu.
2. Press enter, then use the receiver arrow buttons or transmitter menu button to select the installed battery type:
    - Alkaline (default setting)
    - NiMH (nickel metal hydride)
    - Lithium (non-rechargeable, 1.5V max)
3. Press enter to save.

Note: For accurate battery runtime monitoring, alkaline or lithium batteries are recommended.

Shure SB903 Rechargeable Battery

The SB903 lithium-ion rechargeable battery powers the SLXD5+ bodypack receiver and SLX-D+ transmitters. Use the SBC10-903, SBC203, or SBC80-903 chargers to recharge SB903 batteries.

IMPORTANT: Always fully charge a new battery before first use.

To fully charge a new SB903 battery, it must be placed directly in the charger. After the first charge, the battery can be charged by docking the transmitter in the SBC203 dual-bay charging station.

Important Tips for Care and Storage of Shure Rechargeable Batteries

Proper care and storage of Shure batteries results in reliable performance and ensures a long lifetime.

- Always store batteries and transmitters at room temperature
- Ideally, batteries should be charged to approximately 40% of capacity for long-term storage
- During storage, check batteries every 6 months and recharge to 40% of capacity as needed

SBC-DC-903 DC Adapter Battery Eliminator for SLXD5+

The SBC-DC-903 is a voltage adapter that takes the place of an SB903 battery in the SLXD5+ bodypack receiver, allowing you to custom-wire connectors to suit specific outputs. The included battery door replacement provides an opening for the power cable.

SB903 Battery Chargers

SBC10-903 Single-Bay Charger

The SBC10-903 single-bay charger offers a compact charging solution.

1. Plug the charger into an AC power source or USB port.
2. Insert a battery into the charging bay.
3. Monitor the charging status LEDs until charging is complete.

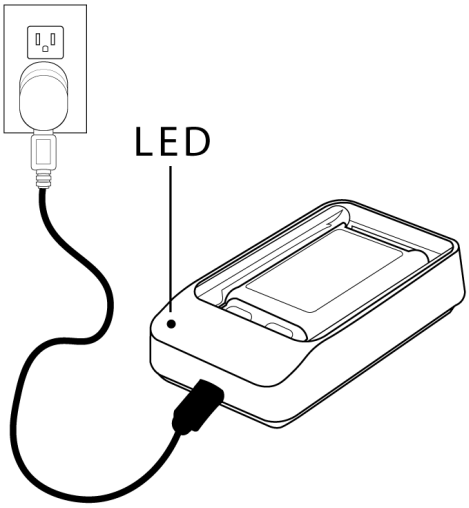

Charging Status LEDs

Description	Color	State
Ready for Use	Green (solid)	Device is fully charged
Charging	Red (flashing)	Charging
Error	Yellow (quick flashing)	Battery or power supply error
Not Charging	Off	Power supply is disconnected, or no battery is inserted in the charging bay

SBC203 Dual-Bay Charger

The SBC203 dual-bay charger can charge individual batteries or batteries installed in transmitters.

1. Plug the charger into an AC power source.
2. Insert batteries or transmitters into the charging bay.

   IMPORTANT: Insert transmitters facing forward to avoid damage.

3. Monitor the charging status LEDs until charging is complete.

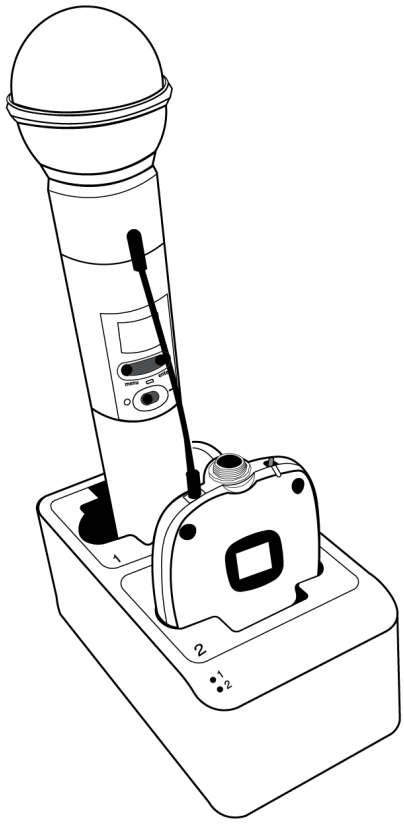

Charging Status LEDs

Description	Color	State
Ready for Use	Green (solid)	Device is fully charged
Charging	Red (flashing)	Charging
Error	Yellow (quick flashing)	Battery or power supply error*****
	Yellow (slow flashing)	Outside of operating temperature range
Not Charging	Off	Power supply is disconnected, or no device is docked in the charging bay

***** If an error occurs when a transmitter is docked in the charger, remove the battery from the transmitter and place directly into the charger. If the error persists, contact Shure Technical Support.

SBC80-903 Cradle Charger

The SBC80-903 cradle charger holds eight SB903 batteries and is designed to fit into a rackmount drawer. It may be used in any appropriate location with adequate space and ventilation.

1. Connect the DC power cable to the input port on the back of the charger.
2. Finger tighten the lock nut for a secure connection.
3. Connect the power cable to an AC adapter.
4. To charge, place batteries into the charging bays with slotted sides down. The LEDs illuminate to indicate battery status.

The SBC80-903 has no power switch. When plugged in, the charger is ready. The LEDs illuminate after batteries are inserted.

WARNING:

- Do not use pliers or any other tools to tighten lock nut. DC power cable must be attached before charger unit is installed.
- Do not plug in power supply unit until DC connection and charger are in place.
- After securing the charger, plug the power cable into a properly grounded outlet.

Charging Status LEDs

Description	Color	State
Ready for Use	Green (solid)	Device is fully charged
Charging	Red (flashing)	Charging
Error	Yellow (quick flashing)	Battery or power supply error
	Yellow (slow flashing)	Outside of operating temperature range
Not Charging	Off	Power supply is disconnected, or no battery is inserted in the charging bay

Average Charging Times

The following averages are based on a battery with 100% health:

SBC10-903

Time Charging	Operating Runtime*	Capacity
1 hour	1 hour	15%
3 hours	4 hours	50%
5 hours : 30 minutes	>8 hours	100%

SBC203

Time Charging	Operating Runtime*	Capacity
30 minutes	1 hour	15%
1 hour : 15 minutes	4 hours	50%
2 hours : 30 minutes	>8 hours	100%

SBC80-903

Time Charging	Operating Runtime*	Capacity
30 minutes	1 hour	15%
1 hour : 15 minutes	4 hours	50%
2 hours : 30 minutes	>8 hours	100%

*Digital feedback reduction (DFR) may shorten SLXD5+ battery life.

How to Set Up Your SLX-D+ System

To set up your system:

1. Set Up Hardware: Connect cables, install transmitter batteries, and power on devices.
2. Link Transmitters and Receivers: For initial setup, pair SLX-D+ transmitters and receivers via ShowLink Ease.
3. Coordinate Frequencies: Perform a scan of the RF spectrum to find compatible frequencies for your devices.

Step 1: Set Up SLXD5+ Hardware

1. With the power switch in the O (off) position, insert the battery or connect the USB-C port on the bottom to a suitable power source.

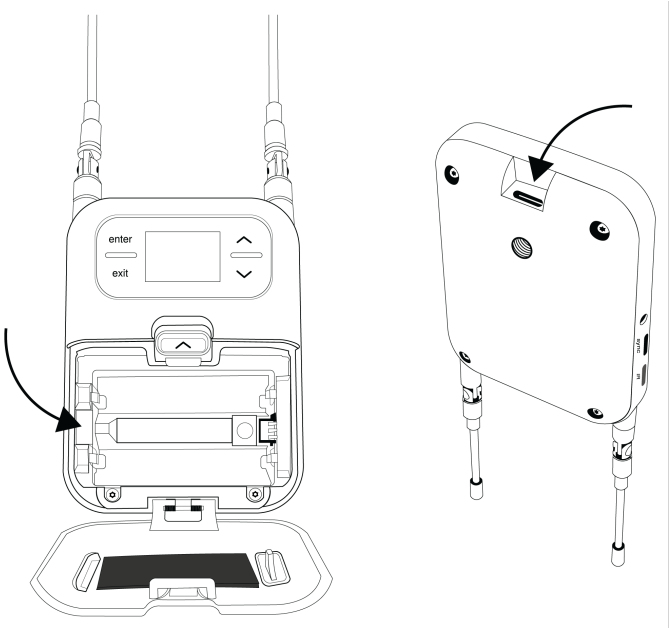

2. Connect the audio output to a camera or recorder.

   Note: *Set the* Audio Out *to* Dual Mono *for 3.5mm devices, or to* Balanced (Mono) *for XLR devices in the receiver menu.*

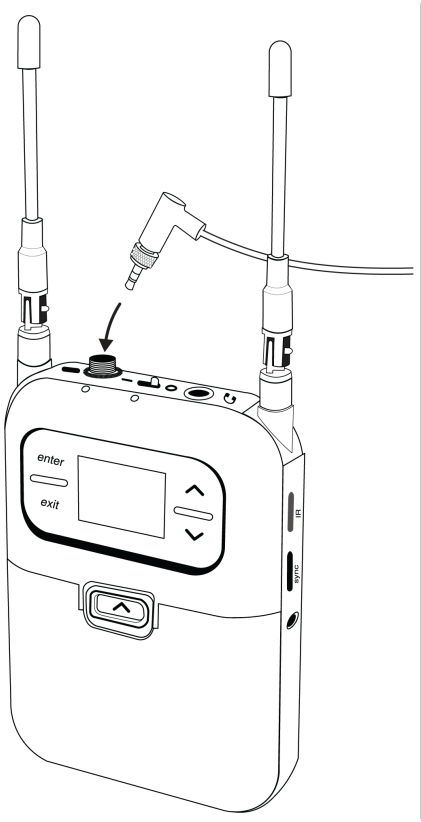

3. Turn on the power by pushing the switch to the I (on) position. Use the menu to set the system to microphone (mic) or instrument (line) level as appropriate.

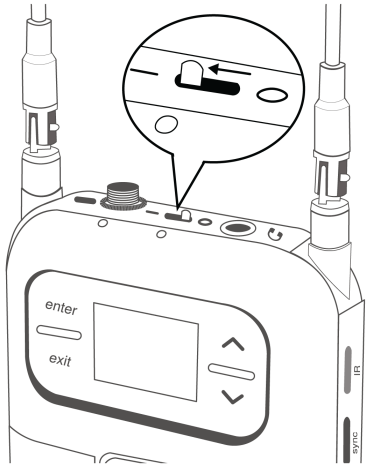

Install Transmitter Batteries

IMPORTANT: To avoid damaging transmitters, only use Shure SB903 Li-ion rechargeable batteries or 1.5V AA batteries.

Bodypack / Plug-On:

1. Push the tab up and open the battery door to access the battery compartment.
2. Place a Shure SB903 Li-ion rechargeable battery **or** 2 AA batteries in the compartment.
3. Close the battery door.

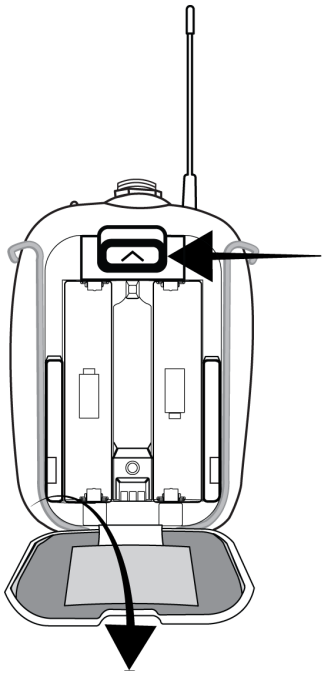

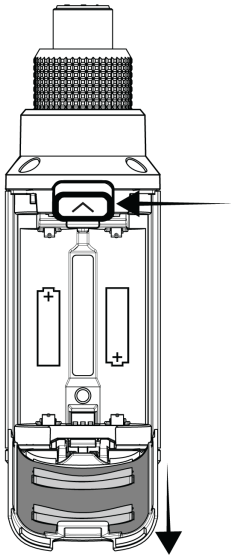

Handheld:

1. Remove the battery cover to access the battery compartment.
2. Lift the battery door to open the battery compartment.
3. Place a Shure SB903 Li-ion rechargeable battery **or** 2 AA batteries in the compartment.
4. Replace the battery cover.

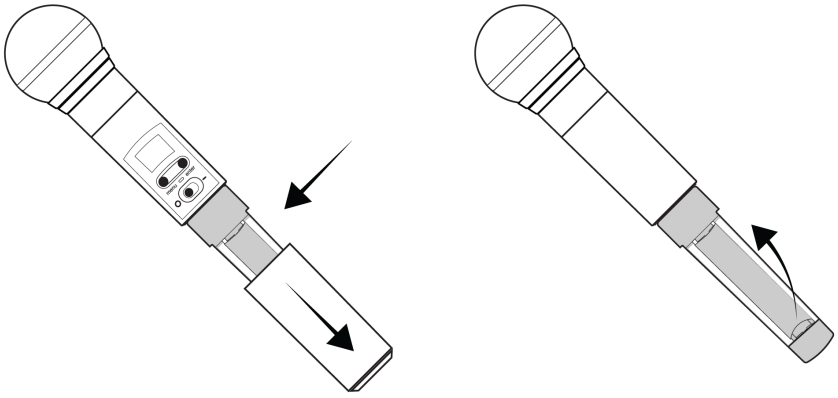

Step 2: Link Transmitters and Receivers

To link SLX-D+ transmitters:

1. Align the infrared (IR) ports on the transmitter and receiver.
2. Push the sync button. A double-arrow icon displays on both devices when linked successfully via ShowLink Ease.

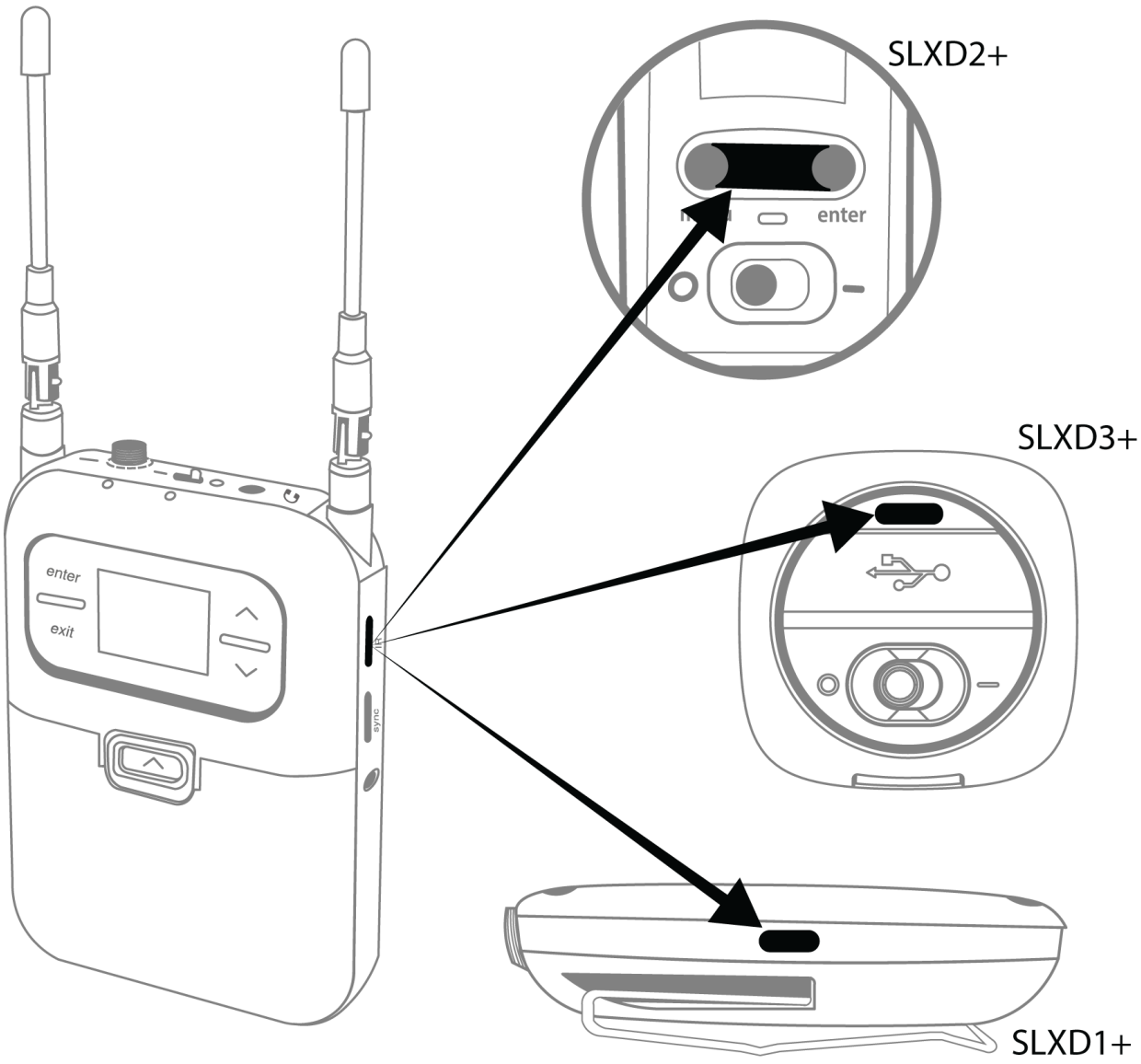

What is ShowLink Ease?

ShowLink Ease allows you to remotely adjust transmitter settings from the receiver menu, update transmitter firmware, and deploy frequencies to both devices during frequency coordination setup and during interference management without needing to resync.***** Devices maintain the link even after power cycles. ShowLink Ease operates within a range of 100 ft (30 m) and an unobstructed line of sight.

*****Transmitters must be resynced after exiting multi-mic mode, updating audio encryption settings, or after a factory reset.

Step 3: Coordinate Frequencies

Frequency coordination prevents interference between wireless systems by scanning the RF spectrum for the best available frequency to deploy to your devices. Group scan identifies the number of available channels in each group, and automatically assigns an available channel within your selected group. Perform a channel scan if you want to find a new channel.

IMPORTANT: Before you begin frequency coordination, transmitters and receivers must be linked via ShowLink Ease.

What are Groups and Channels?

To minimize interference, Shure wireless systems organize RF bands into predefined **groups** and **channels**. A group is a set of compatible frequencies within a frequency band. A single frequency within a group is a channel. Tune a receiver and transmitter to the best available channel within its group to set up your system.

Note: All receivers in the same band should be set to the same group. Because groups are band-dependent, some systems don't have multiple groups. Single-group bands have the same RF performance as those with multiple groups.

SLXD5+ Group Scan

1. Go to `Frequency` > `Group Scan`.
2. The group with the most available channels is displayed. Use the arrow buttons to change the group number and view available channels in each group.
3. Push the enter button to set the receiver to the group and channel shown on the display.*****

SLXD5+ Channel Scan

1. Go to `Frequency` > `Channel Scan` and push the control knob to continue.
2. Use the arrow buttons to select the group for your receiver. The group should be the same as other receivers in the same frequency band.
3. Push the enter button to start the channel scan.
4. Push enter to confirm the selected channel, or use the arrow buttons to view other available channels.*****

Manually Select Frequencies

To manually adjust group, channel, or frequency:

1. Go to `Frequency` > `Manual Setup` and select and adjust the group (G), channel (C), or frequency (MHz) as needed.
2. Press enter to confirm and save your settings.*****

*****Frequencies will automatically deploy to transmitters linked via ShowLink Ease without needing to resync.

How to Set Up Multiple SLXD5+ Systems

Use multi-mic mode to share frequency lists when setting up multiple portable systems, or to monitor multiple transmitters from a receiver. After configuration, any SLXD5+ receiver in your system can receive audio from any transmitter linked to a channel on your shared list.

To set up multiple SLXD5+ systems, you must **create a frequency list** then **share the frequency list** between receivers.

Note: All receivers in your system must be in the same operating band.

Multi-Mic Menu Overview

IMPORTANT: Receivers will unlink from transmitters when using the multi-mic mode menu. Resync transmitters and receivers after exiting multi-mic mode.

From the Multi-Mic menu screen:

- **Enter mode/list:** Add additional frequencies, or press enter to change the selected channel's name, adjust the audio gain, or delete the frequency from the list.
- **Create list:** Start a group scan to identify available channels. Select the desired group and set the channel count to the number of transmitters in your system.
- **Share list:** Copy the list on your device to other SLXD5+ receivers via IR sync.

- **Delete list:** Clear the list data stored on your device.

Create a Frequency List

1. Go to `Multi-Mic` > `Create List`.
2. Push enter to start a group scan.
3. After the group scan, use the arrow buttons to select the desired group and push enter to confirm.
4. Set the channel count to the number of transmitters in your system, then push enter to confirm.

Add or Edit Frequencies:

To add or edit frequencies in your shared list:

1. Go to `Multi-Mic` > `Enter Mode/List` from any receiver in your system.
2. Scroll to the bottom of the list and select Add frequency.
3. Use the arrow buttons to manually set the frequency, then push enter to confirm.

How to Share a Frequency List

1. Go to `Multi-Mic` > `Enter Mode/List` from any receiver in your system.
2. Align the IR ports of a primary receiver and another SLXD5+ receiver, then push the sync button on the primary receiver to wirelessly share frequency lists. Repeat as needed for each additional receiver.
3. Set a receiver to a shared frequency by using the arrow buttons to highlight a frequency in the list.

Monitor Multiple Transmitters

Any SLXD5+ receivers that have been set up to share frequency lists in your system can receive audio from any microphone transmitter synced to a frequency on your shared list.

1. Go to `Multi-Mic` > `Enter Mode/List`.
2. Use the arrows to highlight a frequency.
3. Listen to the audio through the receiver headphone jack.

Device Management

Gain Adjustment

Go to `Audio Out` > `Mic/Line` to select the overall output level for your receiver. Set the gain for the Audio Out and Headphone outputs from their respective menu screens.

Locking and Unlocking Devices

Receivers and transmitters can be locked to prevent unauthorized setting changes or accidental power-off. The following control lock options are available:

- Unlock: receiver controls are unlocked
- Menu Only: prevents access to menu items
- Menu & Power: disables the power switch and menu controls

Locking Receivers

1. Go to `Device` > `Device Lock`.

2. Select the desired control lock option and press enter to confirm.

Locking Transmitters

Use auto lock to lock and unlock transmitter controls. When auto lock is enabled, transmitter controls lock when you return to the home screen. The enter button can still be used to change the home screen display on a locked transmitter.

To lock transmitters:

1. Go to the Lock Type menu and select a control lock option.
2. Go to the Auto Lock menu.
3. Press enter then menu to select On. Auto lock must be on for the transmitter to lock.
4. Press enter to save. A lock icon appears on the display to confirm that locks are enabled.

To unlock the transmitter and deactivate auto lock:

1. Press enter then menu to unlock the transmitter controls.
2. Go to Auto Lock and press enter then menu to select Off.
3. Press enter to save. The transmitter will no longer lock when you return to the home screen.

Interference Management

SLXD5+ monitors the RF environment for potential sources of interference that could cause audio dropouts. In the event of signal degradation, interference management technology provides options to move to a clean, compatible frequency. Respond to an alert by manually selecting a new frequency, or allow the device to automatically deploy a backup frequency the instant interference is detected.

Setting the Interference Management Mode

Set the interference management mode to determine how the receiver will respond in the event of interference. To choose an interference management mode:

1. Go to `Frequency` > `Interference`.
2. Choose one of the following modes:
    - Alert (default): interference alert appears on display
    - Manual: alert appears on display, then prompts you to press enter and manually select a new frequency
    - Automatic: receiver automatically scans and deploys a new frequency to the receiver and linked transmitter*****

*****For automatic mode to function, you must set the receiver to a group that does not display dashes, and transmitters must be powered on, linked via ShowLink Ease, and within range of the receiver.

Digital Feedback Reduction (DFR)

Digital feedback reduction detects feedback and deploys up to 16 filters to reduce feedback frequencies for individual channels. Enable feedback reduction individually for each channel, as necessary.

How to Enable Digital Feedback Reduction

1. Go to `Audio Out` > `Feedback Reduction`.
2. Select On to reduce feedback. Filters are active and change in real-time based on the sound environment.

Note: Turn digital feedback reduction off to reset all filters.

Locking Digital Feedback Reduction Filters

When feedback reduction is on and filters are engaged, you can lock filters to prevent further changes. Engaged filters remain the same when locked, even after power cycling. To lock filters:

1. From the Feedback Reduction menu screen, push enter.
2. Scroll and select Lock.
3. Scroll again to view the filtered frequency list.

Note: When enabled, digital feedback reduction may shorten SLXD5+ battery life.

Audio Encryption

Advanced Encryption Standard (AES-256) ensures secure audio transmission between a receiver and transmitter. When encryption is enabled, the receiver generates a unique encryption key which is shared with the transmitter after IR sync. Transmitters and receivers that share an encryption key form a protected audio path, preventing unauthorized access by other receivers. To maintain security, devices remain encrypted between power cycles.

IMPORTANT: Encryption is not shared via ShowLink Ease, so devices must be resynced when the encryption status changes from on or off.

To enable encryption:

1. Go to the `Audio Out` > `Encryption` menu on the receiver.
2. Select On. Linked transmitters will unlink from the receiver.
3. IR sync the transmitter and receiver. A key icon appears on the receiver and transmitter display when encryption is on.

Using Wireless Workbench with SLXD5+

Wireless Workbench enables remote adjustments for devices in your wireless system so you can manage essential tasks, such as inventory setup, frequency coordination, device monitoring, and real-time changes to gain, RF power, and control locks. Wireless Workbench desktop and mobile versions are available, but SLXD5+ can only be added as a virtual device in the desktop version. See the Wireless Workbench desktop user guide for more information on virtual devices.

Wireless Workbench Mobile uses Bluetooth connection to enable live remote management for your SLXD5+ system. To connect your mobile device and receiver via Bluetooth:

1. Enable Bluetooth on your mobile device.
2. From the receiver display, go to `Device` > `App Connection` > `App Control` and confirm app control is on.
3. Go to the previous menu screen and scroll to Pairing Mode, then push enter to select. A unique device ID will show on the display.
4. From the Wireless Workbench Mobile app, go to `main menu` > `Bluetooth` and select the device that matches the device ID on the receiver display.
5. Enter a name for your mobile device and tap Connect. This name appears on the SLX-D+ receiver display so you know which mobile device your system is connected to.
6. Tap Pair to confirm. Channels appear in the inventory list when the device is connected, and the receiver will display a success screen and a Bluetooth icon.

For more information on Wireless Workbench Mobile, visit the user guide.

Firmware

It is best practice for all devices to operate on the same firmware version. Go to the About screen of your devices to view the firmware version.

The format for Shure device firmware is MAJOR.MINOR.PATCH.BUILD (example: 1.2.21.1). At a minimum, all devices on the same network must have identical MAJOR and MINOR firmware version numbers (example: 1.2.x.x).

New versions of firmware can be uploaded and installed using the Shure Update Utility (SUU). Download the SUU from https://www.shure.com/en-US/products/software/shure_update_utility.

CAUTION! Ensure the device has a stable network connection during the update. Do not turn off the device until the update is complete.

Updating Receiver Firmware

1. Connect the device and computer to the same network (set to the same subnet).
2. Open the SUU application.
3. Click the updates button at the top of the window to open the Download Manager.

   Note: *This button will be labeled either* "Check for updates..." *or* "[#] updates available"

4. From the Download Manager, select the desired firmware versions.
5. Click Download, then close the Download Manager. Downloaded firmware can be viewed and managed in the Firmware tab.
6. From the Update Devices tab, select the new firmware and click Send Updates.

Updating Transmitter Firmware

Transmitter firmware updates are managed from the receiver. Confirm the receiver is operating the latest firmware version, then update transmitters using one of the following methods:

Via IR Sync

1. From the receiver, go to `Tx` > `Tx FW Update` > `IR`.
2. Align the infrared (IR) ports on the transmitter and receiver, then push the sync button. Alignment must be maintained during the entire update cycle.
3. Once the sync is complete, the system is ready for use.

Via ShowLink Ease

1. Power on the linked transmitter and place near the receiver.
2. From the receiver, go to `Tx` > `Tx FW Update` > `ShowLink Ease`.
3. Once the transmitter display returns to the home screen, the update is complete and the system is ready for use.

Transmitters that fail to update are skipped, and failure details appear on the receiver channel display.

Optional Accessories

Batteries and Chargers

Shure Lithium-Ion Rechargeable Battery	SB903

8-Bay Cradle Charger	SBC80-903-AR
	SBC80-903-AZ
	SBC80-903-BR
	SBC80-903-CN
	SBC80-903-E
	SBC80-903-IN
	SBC80-903-J
	SBC80-903-K
	SBC80-903-TW
	SBC80-903-UK
	SBC80-903-US
Dual Docking Charger	SBC203-AR
	SBC203-AZ
	SBC203-BR
	SBC203-CN
	SBC203-E
	SBC203-IN
	SBC203-J
	SBC203-K
	SBC203-TW
	SBC203-UK
	SBC203-US
Single Battery Charger	SBC10-903-AR
	SBC10-903-AZ
	SBC10-903-BR
	SBC10-903-CN
	SBC10-903-E
	SBC10-903-IN
	SBC10-903-J
	SBC10-903-K

	SBC10-903-TW
	SBC10-903-UK
	SBC10-903-US
Battery Eliminator	SBC-DC-903

Cases and Connectors

Water resistant cover	WA301
Non-conductive camera shoe adapter	WA311

Specifications

System RF

RF Carrier Frequency Range

470–937.5 MHz, varies by region (See Frequency Range and Output Power table)

Working Range

100 m (328 ft)

Note: Actual range depends on RF signal absorption, reflection and interference.

RF Tuning Step Size

25 kHz, varies by region

JB band: 125 kHz

Image Rejection

>85 dB, typical

RF Sensitivity

−97 dBm at 10^{-5} BER

System Temperatures

Operating Temperature Range

-18°C (0°F) to 50°C (122°F)

Note: Battery characteristics may limit this range.

Storage Temperature Range

-29°C (-20°F) to 74°C (165°F)

Note: Battery characteristics may limit this range.

System Audio

Latency
2.8 ms

High-Pass / Low Cut Filter
160 Hz @ -12 dB/octave

Note: Factory default is for the HPF to be off

Audio Dynamic Range
118 dB at 1% THD, A-weighted, typical

Total Harmonic Distortion
<0.02%

System Audio Polarity
Positive pressure on microphone diaphragm produces positive voltage on pin 2 with respect to pin 3 of XLR output, and the tip of the 6.35 mm (¼ in.) with respect to the ring of the 6.35 mm output.

Mic Offset Range
0 to 21 dB (in 3 dB steps)

Bluetooth (BLE)

Frequency Range
2402–2480 MHz

RF Power
10 mW EIRP

Modulation Type
BLE (GFSK)

Antenna Type
Chip

Antenna Gain
-0.7 dBi

SLXD5+ Bodypack Receiver

Dimensions
107 × 68 × 25.3 mm (4.21 × 2.68 × 1 in.), H×W×D

Weight
182 g

Housing

Aluminum

Power Requirements

Battery	Rechargeable Li-Ion, or 1.5 V AA batteries (2)
Power Supply	SBC-DC-903 Battery Eliminator, or 5V DC via USB-C

RF Input

Spurious Rejection

>75 dB, typical

Impedance

50 Ω

Phantom Power Protection

Yes

Antenna Type

¼ wave whip

Audio Output

Audio Frequency Response

20 Hz– 20 kHz (+1, -3 dB)

Connector Type

⅛" (3.5 mm), ×2

Configuration

Balanced (Mono)	Tip = audio +, Ring = audio -, Sleeve = ground
Dual Mono	Tip = left, Ring = right, Sleeve = ground

See drawing for details

Impedance (Camera)

Balanced (Mono) Line	450 Ω
Balanced (Mono) Mic	240 Ω
Dual Mono Line	400 Ω
Dual Mono Mic	200 Ω

Full Scale Output

Camera (balanced line)	15 dBV
Headphone	13 mW @ 64 Ω load

SLXD1+ Bodypack Transmitter

Battery Type
Rechargeable Li-Ion or 1.5 V AA batteries

Dimensions
98 x 68 x 25.5 mm (3.86 x 2.68 x 1 in.), H x W x D

Weight
89 g

Housing
PC/ABS

Audio Input

Connector
4-Pin male mini connector (TA4M)

Configuration
See drawing for details

Impedance
1 MΩ

Maximum Input Level
8.2 dBV (2.57 Vrms, 7.27 Vpp)

Preamplifier Equivalent Input Noise (EIN)
-118 dBV

RF Output

Antenna Type
1/4 wave

Occupied Bandwidth
<200 kHz

Modulation Type
Shure proprietary digital

Power
1 mW or 10 mW

See Frequency Range and Output Power table, varies by region

SLXD2+ Handheld Transmitter

Battery Type
Rechargeable Li-Ion or 1.5 V AA batteries

Dimensions
37.1 x 176 mm (1.46 x 6.93 in.), D x L

Weight
144 g

Housing
Aluminum

Audio Input

Configuration
See drawing for details

Maximum Input Level
8.2 dBV (2.57 Vrms, 7.27 Vpp)

Note: Dependent on microphone type

RF Output

Antenna Type
Integrated Single Band Helical

Occupied Bandwidth
<200 kHz

Modulation Type
Shure proprietary digital

Power
1 mW or 10 mW

See Frequency Range and Output Power table, varies by region

SLXD3+ Plug-On Transmitter

Battery Type
Rechargeable Li-Ion or 1.5 V AA batteries

Dimensions
126 × 41 × 41 mm (4.96 × 1.61 × 1.61 in.), L×W×D

Weight
200 g

Housing
Aluminum, zinc alloy, PC/ABS

Audio Input

Connector Type
XLR

See drawing for details

Maximum Input Level

Pad -12 dB	20.5 dBV
0 dB	8.5 dBV
Boost +12 dB	-3.5 dBV

1 kHz at 1% THD

Note: Dependent on microphone type

Phantom Power
+48 V (7 mA maximum), +12 V (15 mA maximum)

RF Output

Antenna Type
Dipole

Occupied Bandwidth
<200 kHz

Modulation Type
Shure proprietary digital

Power
1 mW / 10 mW / 30 mW

See Frequency Range and Output Power table, varies by region

SB903 Rechargeable Battery

Charge Voltage
4.2 V (±0.03 V)

Charge Current

SBC10-903	220 mA
SBC203	625 mA (normal), 250 mA (reduced)*
SLXD3+	650 mA
SLXD5+	600 mA

*Normal = 10 °C to 45 °C (50 °F to 113 °F), reduced = 0 °C to 10 °C (32 °F to 50 °F)

Nominal Voltage

3.6 V

Nominal Capacity

1200 mAh

Housing

Molded Polycarbonate

Charging Temperature Range

0 °C to 45 °C (32 °F to 113 °F)

Dimensions

14.5 x 32.5 x 55.5 mm (0.57 x 1.28 x 2.19 in.), H x W x D

Weight

28 g

SBC10-903 Battery Charger

DC Input Voltage Range

5 V DC

Charge Current

USB-powered

220 mA

Charge Time

50% = 3 hours; 100% = 5 hours : 30 minutes

External Power Supply

SBC10-USB

Power Requirements

5 V DC, 1 A max.

Operating Temperature Range

0 °C to 45 °C (32 °F to 113 °F)

Dimensions
20.5 x 37.5 x 79.5 mm (0.81 x 1.48 x 3.13 in.), H x W x D

Weight
39 g

Housing
Molded Polycarbonate

SBC203 Battery Charger

Charge Current
625 mA or 250 mA

Lower current used when using another power source, or operating between 0°C and 10°C

Charge Time
50% = 1 hour : 15 minutes; 100% = 2 hours : 30 minutes

External Power Supply
SBC10-USB15W or SBC10-USB15WS

Power Requirements
5 V DC, 3 A max.

Operating Temperature Range
0 °C to 45 °C (32 °F to 113 °F)

Dimensions
66.3 x 86.0 x 155 mm (2.61 x 3.38 x 6.13 in.), H x W x L

Weight
284 g

Housing
ABS

SBC80-903 8-Bay Battery Charger

Charge Current
625 mA

Charge Time
50%=1 hour; 100%=3 hours

External Power Supply
PS60

Power Requirements
15V DC, 4A

Dimensions
30 mm x 173 mm x 146 mm (1.18 in. x 6.81 in. x 5.75 in.), H x W x D

Weight
375 g (13.2 oz.)

Storage Temperature Range
−20°F to 165°F (−29°C to 74°C)

Charging Temperature Range
32°F to 113°F (0°C to 45°C)

SBC-DC-903 DC Adapter Battery Eliminator

Input
5V to 24V DC

Output
3V DC, 500mA max

Dimensions
49.9 mm × 32.9 mm × 14.5 mm (1.96 in. × 1.30 in. × 0.57 in.), H × W × D

Weight
30 g (1.1 oz.)

Storage Temperature Range
-20°F to 165°F (-29°C to 74°C)

Operating Temperature Range
0°F to 135°F (-18°C to 57°C)

Receiver Output Connectors

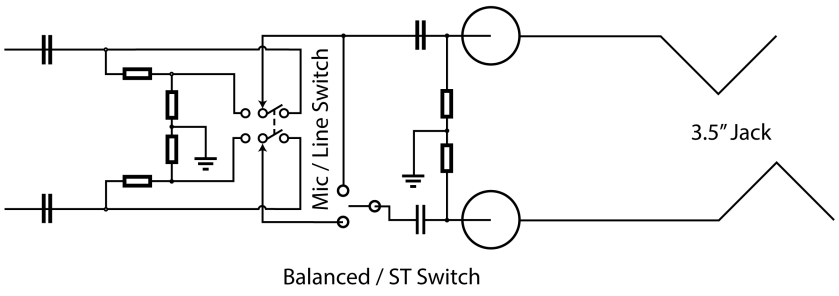

Transmitter Input

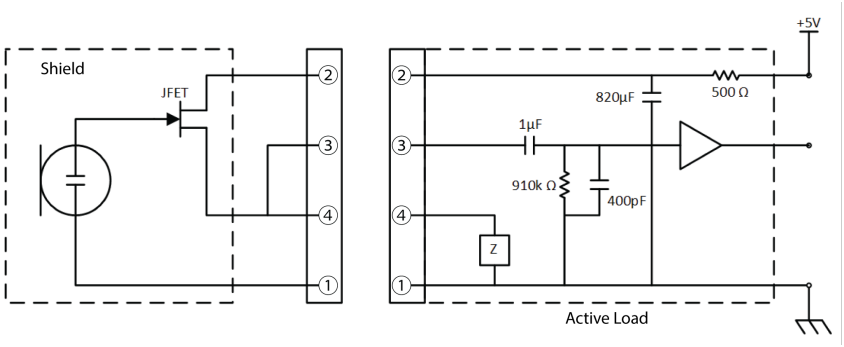

SLXD1+/SLXD2+

1. Ground
2. Bias Voltage
3. Audio Input
4. Active Load

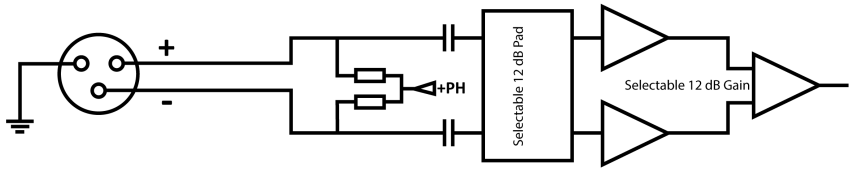

SLXD3+

Frequency Range and Transmitter Output Power

Band	Frequency Range (MHz)	Power (mW RMS)* (Low/High)
G54	479 to 565	1 / 10
G57†	470 to 608	1 / 10 / 30**
G60	470 to 510	1 / 10 / 30**
G64	470 to 616	1 / 10 / 30**
G65	470 to 606	1 / 10 / 30**
G66	487 to 606	1 / 10
H58	520 to 606	1 / 10 / 30**
JB	806 to 810	1 / 10

Band	Frequency Range (MHz)	Power (mW RMS)* (Low/High)
K55	606 to 694	1 / 10 / 30**
K60	614 to 703	1 / 10
L60	630 to 698	1 / 10 / 30**
M55	694 to 703, 748 to 758	1 / 10 / 30**
S50	823 to 832, 863 to 865	1 / 10
X51	925 to 937.5	1 / 10

* Power delivered to the antenna port

** SLXD3 and SLXD3+ only

†Operation mode varies according to region. The maximum power level for Peru is 10mW.

Note: Frequency bands might not be available for sale or authorized for use in all countries or regions.

Frequencies for European Countries

	Frequency Range	Country Code
SLXD-G60	470 - 510 MHz*	A, B, BG, CH, CY, CZ, D, EST, F, GB, GR, H, I, IS, L, LT, NL, P, PL, S, SK, SLO, DK, FIN, M, N, HR, E, IRL, LV, RO, TR
SLXD-G65	470 - 606 MHz*	
SLXD-K55	606–694 MHz*	
SLXD-S50	823–832, 863–865 MHz *	

* This equipment may be capable of operating on some frequencies not authorized in your region.

Safety and Regulatory Information for Wireless Products

Explanation of Symbols

Important Safety Instructions

1. READ these instructions.
2. KEEP these instructions.

3. HEED all warnings.
4. FOLLOW all instructions.
5. DO NOT use this apparatus near water.
6. CLEAN ONLY with dry cloth.
7. DO NOT block any ventilation openings. Allow sufficient distances for adequate ventilation and install in accordance with the manufacturer's instructions.
8. DO NOT install near any heat sources such as open flames, radiators, heat registers, stoves, or other apparatus (including amplifiers) that produce heat. Do not place any open flame sources on the product.
9. DO NOT defeat the safety purpose of the polarized or grounding type plug. A polarized plug has two blades with one wider than the other. A grounding type plug has two blades and a third grounding prong. The wider blade or the third prong are provided for your safety. If the provided plug does not fit into your outlet, consult an electrician for replacement of the obsolete outlet.
10. PROTECT the power cord from being walked on or pinched, particularly at plugs, convenience receptacles, and the point where they exit from the apparatus.
11. ONLY USE attachments/accessories specified by the manufacturer.
12. USE only with a cart, stand, tripod, bracket, or table specified by the manufacturer, or sold with the apparatus. When a cart is used, use caution when moving the cart/apparatus combination to avoid injury from tip-over.



13. UNPLUG this apparatus during lightning storms or when unused for long periods of time.
14. REFER all servicing to qualified service personnel. Servicing is required when the apparatus has been damaged in any way, such as power supply cord or plug is damaged, liquid has been spilled or objects have fallen into the apparatus, the apparatus has been exposed to rain or moisture, does not operate normally, or has been dropped.
15. DO NOT expose the apparatus to dripping and splashing. DO NOT put objects filled with liquids, such as vases, on the apparatus.
16. The MAINS plug or an appliance coupler shall remain readily operable.
17. The airborne noise of the Apparatus does not exceed 70dB (A).
18. Apparatus with CLASS I construction shall be connected to a MAINS socket outlet with a protective earthing connection.
19. To reduce the risk of fire or electric shock, do not expose this apparatus to rain or moisture.
20. Do not attempt to modify this product. Doing so could result in personal injury and/or product failure.
21. Operate this product within its specified operating temperature range.
22. Follow local regulations and consult qualified personnel if the product installation or relocation requires construction work. Choose mounting hardware and an installation location that can support the weight of the product. Avoid locations subject to constant vibration. Use the required tools to install the product properly. Inspect the product periodically.
23. If your product has a feature to log in, upon first time start up, you must change your password.

WARNING:

- Voltages in this equipment are hazardous to life. No user-serviceable parts inside. Refer all servicing to qualified service personnel. The safety certifications do not apply when the operating voltage is changed from the factory setting.
- If water or other foreign objects enter the inside of the device, fire or electric shock may result.

Safety and Regulatory Information for Battery Chargers

1. This equipment is intended to be used in professional audio applications.

2. Use this battery charger only with the Shure charging modules and battery packs for which it is designed. Use with other than the specified modules and battery packs may increase the risk of fire or explosion.
3. Changes or modifications not expressly approved by Shure Incorporated could void your authority to operate this equipment.

Safety Information for Batteries

1. Battery packs may explode or release toxic materials. Risk of fire or burns. Do not open, crush, modify, disassemble, heat above 140°F (60°C), or incinerate.
2. Follow instructions from manufacturer
3. Only use Shure charger to recharge Shure rechargeable batteries

   WARNING:

   

   Danger of explosion if battery incorrectly replaced. Replace only with same or equivalent type.

   Do not dispose of the battery along with household waste. Check with local vendor for proper disposal of used battery packs.

4. Never put batteries in mouth. If swallowed, contact your physician or local poison control center
5. In the event of a cell leaking, do not allow the liquid to come in contact with the skin or eyes. If contact has been made, wash the affected area with copious amounts of water and seek medical advice.
6. Do not short circuit; may cause burns or catch fire
7. Do not charge or use battery packs other than Shure rechargeable batteries
8. Batteries (battery pack or batteries installed) shall not be exposed to excessive heat such as sunshine, fire or the like
9. Do not immerse the battery in liquid such as water, beverages, or other fluids.
10. Do not attach or insert battery with polarity reversed.
11. Keep away from small children.
12. Do not use abnormal batteries.
13. Pack the battery securely for transport.

Note: Use only with the included power supply, batteries, or a Shure-approved equivalent.

Storing Batteries

If batteries are to be stored for more than eight days, they should be placed into a temperature controlled storage area. Recommended battery storage temperature is 10 to 25°C (50 to 77°F).

Additional battery storage information is available at shure.com/battery-storage.

Important Product Regulatory Information

EMC conformance testing is based on the use of supplied and recommended cable types. The use of other cable types may degrade EMC performance.

Regulatory Information for Class B EMC Products

CE Notice

Hereby, Shure Incorporated declares that this product with CE Marking has been determined to be in compliance with European Union requirements.

The full text of the EU declaration of conformity is available at the following site: https://www.shure.com/en-EU/support/declarations-of-conformity.

UKCA Notice

Hereby, Shure Incorporated declares that this product with UKCA Marking has been determined to be in compliance with UKCA requirements.

The full text of the UK declaration of conformity is available at the following site: https://www.shure.com/en-GB/support/declarations-of-conformity.

Cybersecurity STATEMENT OF COMPLIANCE

Product Type: Relevant connectable products defined as internet-connectable products or network-connectable products, in line with inter alia Product Security and Telecommunications Infrastructure Act 2022.

Manufacturer Statement: We, Shure Incorporated, certify and declare as manufacturer under our sole responsibility, that the above-mentioned product(s) conform(s) to the legislation as mentioned under Attachment 1 – to Cybersecurity Statement of Compliance listed here: https://www.shure.com/en-GB/about-us/security.

Information on how to report security issues: The latest version of Shure's Disclosure policy can be found at the following link: https://www.shure.com/en-GB/about-us/security

Security update periods: Shure provides support regarding hardware and software updates that continue the integral cyber security safety of Shure products up to 24 months after end of life (AEOL). For the full statement regarding Shure's product support policy, and information regarding products end of life status information can be found at the following link: https://www.shure.com/en-GB/about-us/security

Manufacturer:
Shure Incorporated 5800 Touhy Avenue
Niles, Illinois, 60714-4608 U.S.A. Website: www.Shure.com.

Technical documentation is kept at:
Shure Incorporated, Corporate Global Compliance Engineering Division

UK Importer/Representative:
Shure UK Limited
Unit 2, The IO Centre, Lea Road, Waltham Abbey, Essex, EN9 1AS, U.K.
Phone: +44 (0)1992 - 703058
Email: EMEAsupport@shure.de

On behalf of Manufacturer:



Chad Ayers
08 May 2025 Niles, Illinois
Senior Director, Global Compliance

FCC Notice

This equipment has been tested and found to comply with the limits for a Class B digital device pursuant to Part 15 of the FCC Rules. These limits are designed to provide reasonable protection against harmful interference when the equipment is operated in a residential installation. This equipment generates, uses, and can radiate radio frequency energy and, if not installed and used in accordance with the instructions, may cause harmful interference with radio communications. However, there is no guarantee that interference will not occur in a particular installation. If this equipment does cause harmful interference with radio or television reception, which can be determined by turning the equipment off and on, you are encouraged to try to correct the interference by one or more of the following measures:

- Reorient or relocate the antenna of the radio/television receiver.
- Increase the separation between this equipment and the radio/television receiver.
- Plug the equipment into a different outlet so that the equipment and the radio/television receiver are on different power mains branch circuits.
- Consult a representative of Shure or an experienced radio/television technician for additional suggestions.

This device complies with Part 15 of the FCC Rules. Operation is subject to the following two conditions:

1. This device may not cause harmful interference.
2. This device must accept any interference received, including interference that may cause undesired operation.

Notice: The FCC regulations provide that changes or modifications not expressly approved by Shure Incorporated could void your authority to operate this equipment.

For information regarding responsible party and other matters relating to FCC compliance, please contact Shure Incorporated, 5800 W. Touhy Avenue, Niles, Illinois 60714-4608 U.S.A. shure.com/contact

Canada, ISED Notice

Notice: The Industry Canada regulations provide that changes or modifications not expressly approved by Shure Inc. could void your authority to operate this equipment.

Regulatory Information for Wireless Products

This equipment complies with FCC radiation exposure limits set forth for an uncontrolled environment. End user must follow the specific operating instructions for satisfying RF exposure compliance. This transmitter must not be co-located or operating in conjunction with any other antenna or transmitter.

The portable device is designed to meet the requirements for exposure to radio waves established by the Federal Communications Commission (USA). These requirements set a SAR limit of 1.6 W/kg averaged over one gram of tissue. The highest SAR value reported under this standard during product certification for use when properly worn on the body/head. This equipment should be installed and operated with minimum distance 0 cm between the radiator and your body/head.

Industry Canada (IC) Notices

This device contains licence-exempt transmitter(s)/receiver(s) that comply with Innovation, Science and Economic Development Canada's licence-exempt RSS(s). Operation is subject to the following two conditions:

1. This device may not cause interference.
2. This device must accept any interference, including interference that may cause undesired operation of the device.

L'émetteur/récepteur exempt de licence contenu dans le présent appareil est conforme aux CNR d'Innovation, Sciences et Développement économique Canada applicables aux appareils radio exempts de licence. L'exploitation est autorisée aux deux conditions suivantes :

1. L'appareil ne doit pas produire de brouillage;
2. L'appareil doit accepter tout brouillage radioélectrique subi, même si le brouillage est susceptible d'en compromettre le fonctionnement.

This equipment complies with ISED radiation exposure limits set forth for an uncontrolled environment. End user must follow the specific operating instructions for satisfying RF exposure compliance. This transmitter must not be co-located or operating in conjunction with any other antenna or transmitter.

Cet équipement est conforme aux limites d'exposition aux rayonnements ISED établies pour un environnement non contrôlé. L'utilisateur final doit suivre les instructions spécifiques pour satisfaire les normes. Cet émetteur ne doit pas être co-implanté ou fonctionner en conjonction avec toute autre antenne ou transmetteur.

This equipment complies with ISED radiation exposure limits set forth for an uncontrolled environment. This equipment could be installed and operated with minimum distance 0 cm between the radiator and your body. End user must follow the specific operating instructions for satisfying RF exposure compliance. This transmitter must not be co-located or operating in conjunction with any other antenna or transmitter.

The portable device is designed to meet the requirements for exposure to radio waves established by the ISED. These requirements set a SAR limit of 1.6 W/kg averaged over one gram of tissue. The highest SAR value reported under this standard during product certification for use when properly worn on the body/head.

Cet équipement est conforme aux limites d'exposition aux rayonnements ISED établies pour un environnement non contrôlé. Cet équipement peut-être installé et utilisé avec une distance minimale de 0 cm entre le radiateur et votre corps. L'utilisateur final doit suivre les instructions spécifiques pour satisfaire les normes. Cet émetteur ne doit pas être co-implanté ou fonctionner en conjonction avec toute autre antenne ou transmetteur.

Le dispositif portatif est conçu pour répondre aux exigences d'exposition aux ondes radio établie par le développement énergétique DURABLE. Ces exigences un SAR limite de 1,6 W/kg enmoyenne pour un gramme de tissu. La valeur SAR la plus élevée signalée envertu de cette norme lors de la certification de produit à utiliser lorsqu'il est correctement porté sur les corps/tête.

Additional Canadian information on RF exposure also can be found at the following Web address: http://www.ic.gc.ca/eic/site/smt-gst.nsf/eng/sf08792.html

ANATEL Notice

Este equipamento não tem direito à proteção contra interferência prejudicial e não pode causar interferência em sistemas devidamente autorizados. Para maiores informações, consulte o site da ANATEL – http://www.anatel.gov.br.

IFETEL Notice

La operación de este equipo está sujeta a las siguientes dos condiciones: (1) es posible que este equipo o dispositivo no cause interferencia perjudicial y (2) este equipo o dispositivo debe aceptar cualquier interferencia, incluyendo la que pueda causar su operación no deseada.

KCC Notice

해당 무선설비는 전파혼신 가능성이 있으므로 인명안전과 관련된 서비스는 할 수 없음.

이 기기는 전파법에 따라 과학기술정보통신부장관의 허가를 받고 운용하여야 합니다.

NBTC Notice

เครื่องโทรคมนาคมและอุปกรณ์นี้มีความสอดคล้องตามมาตรฐานหรือข้อกำหนดทางเทคนิคของ กสทช.

NCC Notice

Connection and use of this communications equipment is permitted by the Nigerian Communications Commission.

NCC Notice

低功率射頻器材技術規範

取得審驗證明之低功率射頻器材，非經核准，公司、商號或使用者均不得擅自變更頻率、加大功率或變更原設計之特性及功能。低功率射頻器材之使用不得影響飛航安全及干擾合法通信；經發現有干擾現象時，應立即停用，並改善至無干擾時方得繼續使用。前述合法通信，指依電信管理法規定作業之無線電通信。低功率射頻器材須忍受合法通信或工業、科學及醫療用電波輻射性電機設備之干擾。

614MHz-703MHz: 使用頻段供其他通訊業務使用時，器材應即停止使用

SRRC Notice

（一）本产品符合“微功率短距离无线电发射设备目录和技术要求”的具体条款和使用场景；

（二）不得擅自改变使用场景或使用条件、扩大发射频率范围、加大发射功率（包括额外加装射频功率放大器），不得擅自更改发射天线；

（三）不得对其他合法的无线电台（站）产生有害干扰，也不得提出免受有害干扰保护；

（四）应当承受辐射射频能量的工业、科学及医疗（ISM）应用设备的干扰或其他合法的无线电台（站）干扰；

（五）如对其他合法的无线电台（站）产生有害干扰时，应立即停止使用，并采取措施消除干扰后方可继续使用；

（六）在航空器内和依据法律法规、国家有关规定、标准划设的射电天文台、气象雷达站、卫星地球站（含测控、测距、接收、导航站）等军民用无线电台（站）、机场等的电磁环境保护区域内使用微功率设备，应当遵守电磁环境保护及相关行业主管部门的规定。

Canada Warning for Wireless

This device operates on a no-protection, no-interference basis. Should the user seek to obtain protection from other radio services operating in the same TV bands, a radio licence is required. For further details, consult Innovation, Science and Economic Development Canada's document Client Procedures Circular CPC-2-1-28, Voluntary Licensing of Licence-Exempt Low-Power Radio Apparatus in the TV Bands.

Ce dispositif fonctionne selon un régime de non_brouillage et de non_protection. Si l'utilisateur devait chercher à obtenir une certaine protection contre d'autres services radio fonctionnant dans les mêmes bandes de télévision, une licence radio serait requise. Pour en savoir plus, veuillez consulter la Circulaire des procédures concernant les clients CPC_2_1_28, Délivrance de licences sur une base volontaire pour les appareils radio de faible puissance exempts de licence et exploités dans les bandes de télévision d'Innovation, Sciences et Développement économique Canada.

ACMA Notice

WARNING: This device operates under an ACMA class license and must comply with all conditions of that license including operating frequencies.

MIC Notice

運用に際しての注意

この機器の使用周波数帯では、電子レンジ等の産業･科学･医療用機器のほか工場の製造ライン等で使用されている移動体識別用の構内無線局（免許を要する無線局）及び特定小電力無線局（免許を要しない無線局）並びにアマチュア無線局（免許を要する無線局）が運用されています。

1. この機器を使用する前に、近くで移動体識別用の構内無線局及び特定小電力無線局並びにアマ　チュア無線局が運用されていないことを確認して下さい。
2. 万一、この機器から移動体識別用の構内無線局に対して有害な電波干渉の事例が発生した場合には、 速やかに使用周波数を変更するか又は電波の発射を停止した上、下記連絡先にご連絡頂き、混　信回避のための処置等（例えば、パーティションの設置など）についてご相談して下さい。
3. その他、この機器から移動体識別用の特定小電力無線局あるいはアマチュア無線局に対して有害な電波干渉の事例が発生した場合など何かお困りのことが起きたときは、保証書に記載の販売代　理店または購入店へお問い合わせください。代理店および販売店情報は Shure 日本語ウェブサイト　http://www.shure.co.jp でもご覧いただけます。

現品表示記号について



現品表示記号は、以下のことを表しています。 この無線機器は 2.4GHz 帯の電波を使用し、変調方式は「FH-SS」方式、想定与干渉距離は 10m です。 2,400MHz～2,483.5MHz の全帯域を使用し、移動体識別装置の帯域を回避することはできません。

Environmental Regulatory Information

Waste Electrical and Electronic Equipment (WEEE) Directive



In the European Union and the United Kingdom, this label indicates that this product should not be disposed of with household waste. It should be deposited at an appropriate facility to enable recovery and recycling.

Registration, Evaluation, Authorization of Chemicals (REACH) Directive

REACH (Registration, Evaluation, Authorization of Chemicals) is the European Union (EU) and the United Kingdom (UK) chemical substances regulatory framework. Information on substances of very high concern contained in Shure products in a concentration above 0.1% weight over weight (w/w) is available upon request.

Recycling Information

Please consider the environment, electric products and packaging are part of regional recycling schemes and do not belong to regular household waste.

中国 RoHS

部件名称	有害物质									
	Pb	Cd	Hg	Cr(VI)	PBB	PBDE	DBP	BBP	DIBP	DEHP
电路模块	X	O	O	O	O	O	O	O	O	O
金属模块	X	O	O	O	O	O	O	O	O	O
线缆及其组件	X	O	O	O	O	O	O	O	O	O
电源适配器*	X	O	O	O	O	O	O	O	O	O
锂电池组*	X	O	O	O	O	O	O	O	O	O

注 1: O: 表示该有害物质在该部件所有均质材料中的含量均不超出电器电子产品有害物质限制使用国家标准要求。
X: 表示该有害物质至少在该部件某一均质材料中的含量超出电器电子产品有害物质限制使用国家标准要求。
注 2: 本产品大部分的部件采用无害的环保材料制造，含有有害物质的部件皆因全球技术发展水平的限制而无法实现有害物质的替代。
注 3: 以上未列出的部分,表明其有害物质含量均不超出电器电子产品有害物质限制使用国家标准要求
*:表示如果包含部分

Battery Regulatory Information

EU and UK Battery Directive



In the European Union and the United Kingdom, this label indicates that the batteries in this product should be collected separately and not be disposed of with household waste. Substances in batteries can have a potential negative impact on health and environment and you have a role in recycling waste batteries thus contributing to the protection, preservation, and improvement of the quality of the environment. You should contact your local authority or retailer for details of the collection and recycling schemes available.

Certifications

Regulatory Model Number (RMN)

For regulatory identification purposes your product has been assigned a regulatory model number (RMN). This regulatory model number should not be confused with product number, as below.

RMN: SLXD5+	**Product Numbers:** SLXD5+ G54/SLXD5+ G57/SLXD5+ G60/SLXD5+ G64/SLXD5+ G65/ SLXD5+ G66/SLXD5 + H58/SLXD5+ JB/SLXD5+ K55/SLXD5+ K60/SLXD5+ L60/SLXD5+ M55/SLXD5+ S50/ SLXD5+ X51

RMN: SLXD1+	**Product Numbers:** SLXD1+ G54/SLXD1+ G57/SLXD1+ G60/SLXD1+ G64/SLXD1+ G65/ SLXD1+ G66/SLXD1 + H58/SLXD1+ JB/SLXD1+ K55/SLXD1+ K60/SLXD1+ L60/SLXD1+ M55/SLXD1+ S50/ SLXD1+ X51
RMN: SLXD2+	**Product Numbers:** SLXD2+ G54/SLXD2+ G57/SLXD2+ G60/SLXD2+ G64/SLXD2+ G65/ SLXD2+ G66/SLXD2 + H58/SLXD2+ JB/SLXD2+ K55/SLXD2+ K60/SLXD2+ L60/SLXD2+ M55/SLXD2+ S50/ SLXD2+ X51
RMN: SLXD3+	**Product Numbers:** SLXD3+ G54/SLXD3+ G57/SLXD3+ G60/SLXD3+ G64/SLXD3+ G65/ SLXD3+ G66/SLXD3 + H58/SLXD3+ JB/SLXD3+ K55/SLXD3+ K60/SLXD3+ L60/SLXD3+ M55/SLXD3+ S50/ SLXD3+ X51

FCC / IC ID

FCC ID: DD4SLXD5EG57, DD4SLXD1EG57, DD4SLXD2EG57, DD4SLXD3EG57

IC: 616A-SLXD5EG57, 616A-SLXD1EG57, 616A-SLXD2EG57, 616A-SLXD3EG57

Energy Efficiency

External Power Supply meets:

1. The U.S. Energy Conservation Standards specified in the Code of Federal Regulations at 10 CFR 430 32(w).

2. EU COMMISSION REGULATION (EU) 2019/1782 of 1 October 2019: Ecodesign requirements for External Power Supply.

3. Australian Standard requirements of AS/NZS 4665.1:2005 and AS/NZS 4665.2:2005.

Battery Charger System meets:

1. The U.S. Energy Conservation Standards specified in the Code of Federal Regulations at 10 CFR 430 32(z)

2. Canada NRCan standard: CAN/CSA-C381.2